Operating instructions

Battery nutrunner
DA2*power*, DA2*docu* and DA2*safety*



PLARAD®
Torque & Tension Systems

Read the manual carefully before use!
Keep for future use.

Maschinenfabrik Wagner GmbH & Co. KG
Birrenbachshöhe 12
53804 Much
GERMANY
Telephone: +49 2245 62-0
Fax: +49 2245 62-22
Email: info@plarad.de
Internet: www.plarad.de
Translation of the original operating instructions
pA# 71909, 7, en_GB

© Maschinenfabrik Wagner GmbH & Co. KG 2024

Information about this manual

This manual enables safe and efficient handling of the battery nutrunners DA2*power*, DA2*docu* and DA2*safety* (referred to in the following as “nutrunner”).

The manual is a component of the nutrunner and must be kept in its immediate vicinity so that the user can access it at any time.

The user must have read and understood this manual prior to commencing any tasks. A basic prerequisite for ensuring that work is performed safely is compliance with all safety instructions and guidelines in this manual. In addition, the local accident prevention regulations and general safety provisions for the nutrunner’s area of application apply.

Illustrations in this manual serve to provide a basic understanding and may differ from the actual design.

Versions

This manual is valid for the following battery nutrunners and software:

- DA2*power*
- DA2*docu*
- DA2*safety*
- Diagnostic Setting Software DSS

DA2*power*	DA2*docu*	DA2*safety*	with angular gearbox
DA2*power*-05	DA2*docu*-05	DA2*safety*-05	DA2-05-W
DA2*power*-10	DA2*docu*-10	DA2*safety*-10	DA2-10-W
DA2*power*-20	DA2*docu*-20	DA2*safety*-20	DA2-20-W
DA2*power*-30	DA2*docu*-30	DA2*safety*-30	DA2-30-W
DA2*power*-36	DA2*docu*-36	DA2*safety*-36	DA2-36-W
DA2*power*-48	DA2*docu*-48	DA2*safety*-48	DA2-48-W
DA2*power*-80	DA2*docu*-80	DA2*safety*-80	DA2-80-W

Other applicable documents



The following documents must be observed in addition to this manual:

- Rating plate
- EU declaration of conformity
- Torque chart
  Individual assignment of fastening operations and torques to the torque levels of the supplied nutrunner
- Certificates (option)
- Technical data sheet
- Battery safety data sheet

Copyright

This manual is protected by copyright.

The transfer of this manual to third parties, duplications of any kind and form – including excerpts – as well as the utilisation and/or communication of the manual's contents are not permitted without the written consent of Maschinenfabrik Wagner GmbH & Co. KG, except for internal purposes. Infringements will result in liability for damages. Maschinenfabrik Wagner GmbH & Co. KG reserves the right to assert additional claims.

Maschinenfabrik Wagner GmbH & Co. KG is the copyright holder.

Further development of the manual

This manual was compiled with great care. If you notice any errors, have any questions or identify any inconsistencies, please notify us in writing. Your suggestions for improvement will help us design a user-friendly manual.

Manufacturer

Maschinenfabrik Wagner GmbH & Co. KG

Birrenbachshöhe 12

53804 Much

GERMANY

Telephone: +49 2245 62-0

Telefax: +49 2245 62-22

Email: info@plarad.de

Internet: www.plarad.de

PLARAD® service

Information about PLARAD® service and authorised PLARAD® partners:

- *www.plarad.de*

Table of contents

1 Unpacking **7**
2 Getting to know the nutrunner **10**
2.1 Illustration of the nutrunner 10
2.2 Brief description 12
2.3 Rating plate 13
2.4 Performance variables 13
2.5 Nutrunner controls 14
2.6 Overview of functions 19
2.7 Upgrade 20
2.8 Accessories 21
2.9 Offset gear accessories 21
2.9.1 Overview 21
2.9.2 Installing the offset gear 23
2.9.3 Using an offset gear 24
2.9.4 Dismantling the offset gear 24
2.9.5 Maintaining an offset gear 25
3 Before you begin – safety **28**
3.1 Symbols in this manual 28
3.2 Symbols on the nutrunner 30
3.3 Intended use 32
3.4 Misuse 32
3.5 General safety instructions for electric tools 33
3.5.1 Workplace safety 34
3.5.2 Electrical safety 34
3.5.3 Personal safety 35
3.5.4 Using and handling the electric tool 35
3.5.5 Service 36
3.6 Residual risks 36
3.6.1 Electrical dangers 37
3.6.2 Mechanical dangers 39
3.6.3 Noise and ergonomics 42
3.7 Operator's obligations 46
3.8 Who is permitted to use the nutrunner? 47
3.9 Personal protective equipment 49
3.10 Environmental protection 50
4 Determining the bolting process **51**
5 Preparing the nutrunner **52**
6 Supplying with energy **54**
6.1 Battery care 54
6.2 Charging the battery 56
6.3 Connecting the nutrunner to the battery 57
7 Setting the torque levels **58**
8 Bracing the reaction arm **59**

9 Tightening and loosening using the DA2*safety*..... 61
10 Tightening..... 62
11 Loosening..... 65
12 Transferring data..... 67
12.1 Installing the Windows®-PLARAD-DA2 software..... 67
12.2 Installing the PLARAD-DA2 app..... 68
12.3 Connecting..... 68
12.4 Home screen structure..... 70
12.5 Getting to know the menu..... 71
12.5.1 Creating a new job..... 73
12.5.2 Sending a job..... 75
12.5.3 Device settings..... 76
12.5.4 Device info..... 78
12.5.5 User Manager..... 78
12.5.6 Documentation..... 80
12.5.7 Disconnecting..... 82
12.5.8 Logging out..... 82
12.5.9 Exiting..... 82
12.6 Minimising the Windows® window..... 83
12.7 Modifying settings..... 83
12.8 Clock..... 83
12.9 Date..... 83
13 Using the Diagnostic Setting Software DSS..... 84
13.1 Connecting to the DSS..... 85
13.2 Getting to know the DSS..... 87
13.3 Customizing..... 88
13.4 Tool diagnostic..... 90
13.5 Settings..... 92
13.6 Help..... 93
14 Performing maintenance..... 94
14.1 Maintenance schedule..... 94
14.2 Having the nutrunner maintained by the user..... 96
14.3 Having service tasks performed by the manufacturer..... 97
15 Troubleshooting..... 99
15.1 Identifying faults..... 99
15.2 DSS – Error messages..... 100
15.3 Performing troubleshooting..... 101
16 Disposing of the nutrunner..... 103
17 Technical data..... 104
18 Index..... 107
Appendix..... 111

1 Unpacking

Delivery



Fig. 1: Transport case

The nutrunner is delivered in a plastic transport case together with the other items in the scope of delivery.

The transport case is packed in a cardboard box upon delivery.

The transport case is fitted with a foam inlay. The recesses in the inlay enable precision storage of the scope of delivery.

Checking the delivery

Check the delivery for transport damage and ensure it is complete immediately upon receipt. If it is incomplete or if there are defects, note the extent of the damage on the transport documents and lodge a complaint immediately.

Scope of delivery

The scope of delivery includes:

- Transport case
- Trolley
- nutrunner
- Reaction arm
- Circlip pliers
- Circlip
- O-ring
- Document folder
  - Operating instructions
  - Torque chart
  - EU declaration of conformity
- Batteries
- Battery charger

Options:

- Impact wrench socket
- Test certificate for torque chart
- Reaction arm versions
- Any accessory ordered
- Diagnostic Setting Software DSS
- Programming adapter, USB cable

Technical data sheet is available online at: https://www.plarad.de/download-center.html

Handling packaging material

The individual packages are packed according to the expected transport conditions. Only environmentally friendly materials are used for the packaging.

The packaging should provide protection against transport damage, corrosion and other damage. For this reason, do not destroy the packaging and do not remove it until shortly before use.

Dispose of packaging material in accordance with the applicable statutory provisions and local regulations.

ENVIRONMENT!

Danger to the environment due to incorrect disposal!

Packaging materials are valuable raw materials and, in many cases, can be further utilised or appropriately reconditioned and recycled. Incorrect disposal of packaging materials can be hazardous to the environment.

- Reuse pallets.
- Dispose of packaging materials in an environmentally sound manner.
- Observe the locally applicable disposal regulations. If necessary, engage the services of a specialist company with regard to disposal.

Transport and storage

Always store and transport the nutrunner in the transport case.

Set the direction of rotation to the middle position (transport position) *'Direction of rotation setting' on page 15*.

Do not take the nutrunner out of the transport case until shortly before use.

Transporting batteries

Batteries contain hazardous substances are classified globally as dangerous goods. These products are therefore only approved for commercial transport under certain conditions.

With regard to road transport in Europe, the regulations of the ADR must be complied with; the regulations of IATA DGR must be complied with for air transport. These contain specifications for packaging and accompanying documentation, for example.

Before transporting hazardous substances, always familiarise yourself with current regulations pertaining to the transport of dangerous goods.

2 Getting to know the nutrunner

2.1 Illustration of the nutrunner

DA2*power* and DA2*docu*

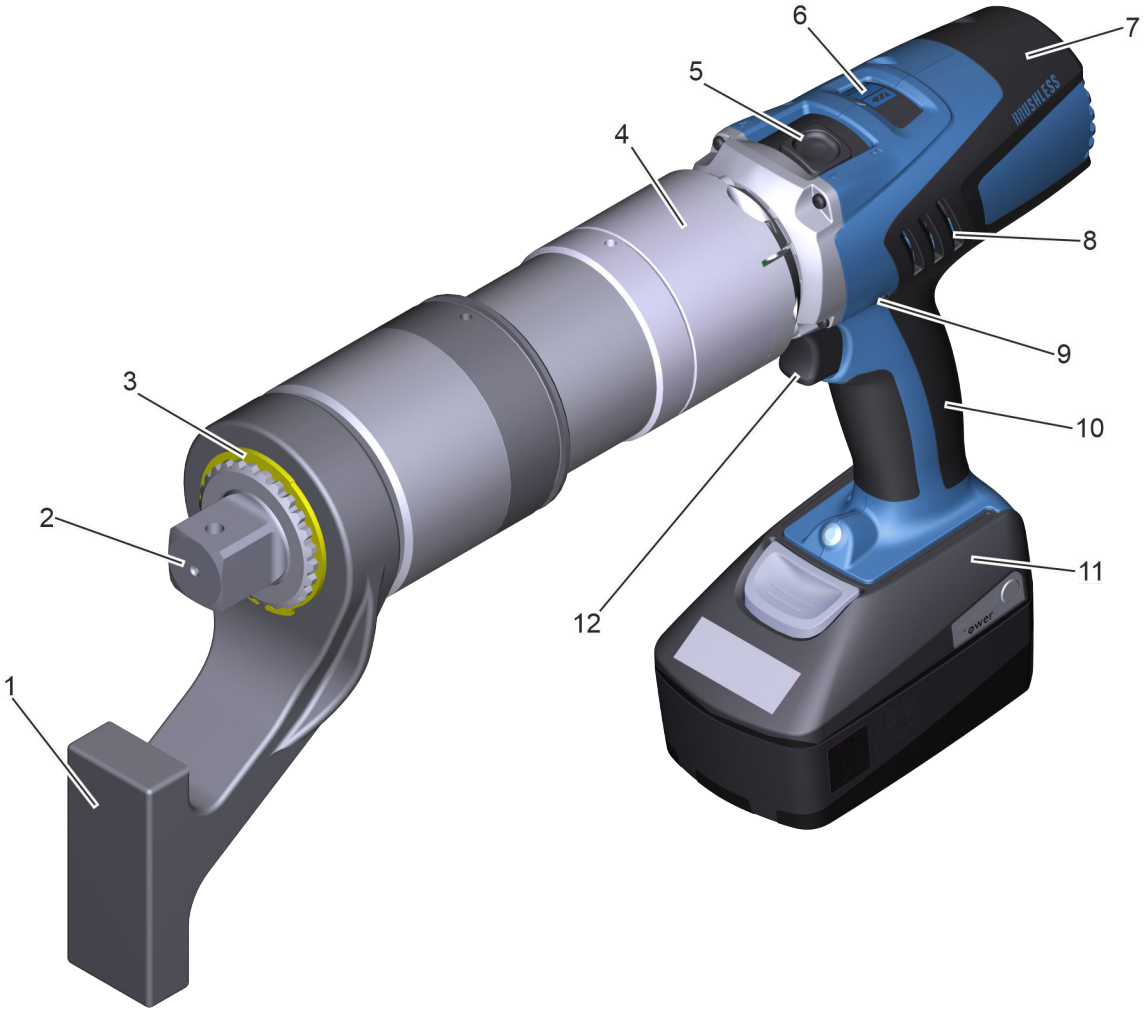

Fig. 2: Illustration of the DA2 and DA2docu battery nutrunners

1	Reaction arm	7	Drive motor
2	Square drive (tool holder)	8	Ventilation slot
3	Reaction arm circlip	9	Direction of rotation setting
4	Safety swivel joint	10	Pistol grip
5	Gear setting	11	Battery
6	Setting levels	12	Trigger

DA2 with angular gearbox

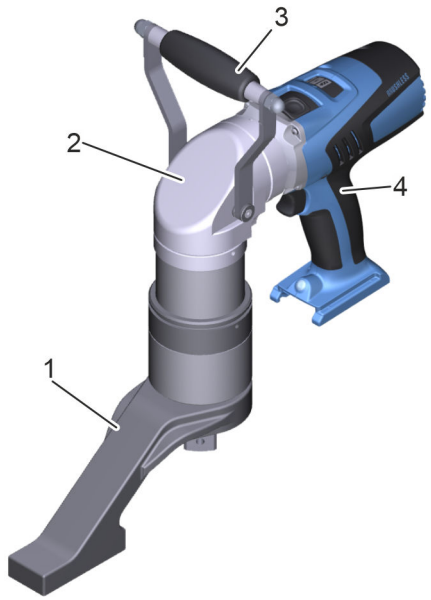

1 Reaction arm
2 Angular gearbox
3 Handle
4 DA2

Fig. 3: Angular gearbox

DA2*safety*

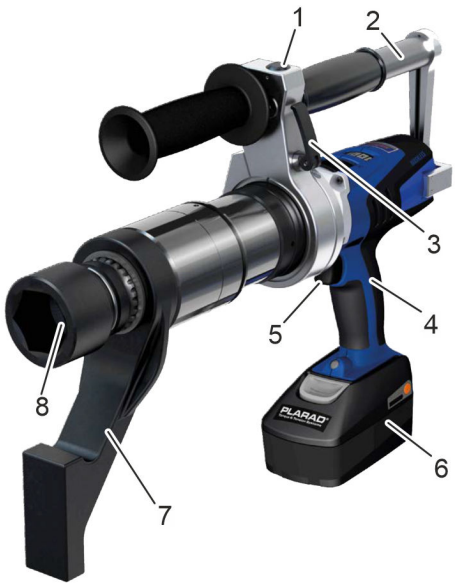

1 Safety-Start-trigger (SST) 2
2 Turnable carry handle
3 Quick-release lock
4 DA2*safety*
5 Safety-Start-trigger (SST) 1
6 Battery
7 Reaction arm
8 Square drive (tool holder)

Fig. 4: DA2safety illustration

Battery



1 Battery ejector button
2 Electrical contacts and guide rail
3 Battery charge status indicator button
4 LED for battery charge status indicator

Fig. 5: Illustration of battery

Battery charger



1 LED display
2 Battery connection
3 Power cable

Fig. 6: Illustration of battery charger

2.2 Brief description

The nutrunner is a hand-held tool for tightening and loosening bolted connections in a dry environment.

The nutrunner is powered electrically with the aid of a battery.

An individually adjustable reaction arm is used to brace the tool against the torque.

The desired torque can be selected by switching the gearbox stages and by actuating the setting potentiometer.

With the DA2*docu* nutrunner version, information and events can be documented in the nutrunner and subsequently transferred to a terminal device.

The DA2*safety* nutrunner version adds two-hand controls to the DA2. With the Safety-Start-triggers (SST) 1 and 2, the nutrunner automatically stops whenever one of the two triggers is released.

2.3 Rating plate

nutrunner

The following data is inscribed on the rating plate:

- Name of the manufacturer including their full address
- Machine designation
- Type designation
- Article/serial number
- Maximum torque
- Year of construction
- Weight
- CE marking/UKCA marking

2.4 Performance variables

Overview of available performance variables for the nutrunner versions:

DA2*power*	**DA2*docu***	**DA2*safety***	**with angular gearbox**
DA2*power*-05	DA2*docu*-05	DA2*safety*-05	DA2-05-W
DA2*power*-10	DA2*docu*-10	DA2*safety*-10	DA2-10-W
DA2*power*-20	DA2*docu*-20	DA2*safety*-20	DA2-20-W
DA2*power*-30	DA2*docu*-30	DA2*safety*-30	DA2-30-W
DA2*power*-36	DA2*docu*-36	DA2*safety*-36	DA2-36-W
DA2*power*-48	DA2*docu*-48	DA2*safety*-48	DA2-48-W
DA2*power*-80	DA2*docu*-80	DA2*safety*-80	DA2-80-W

2.5 Nutrunner controls

DA2*power* and DA2*docu*

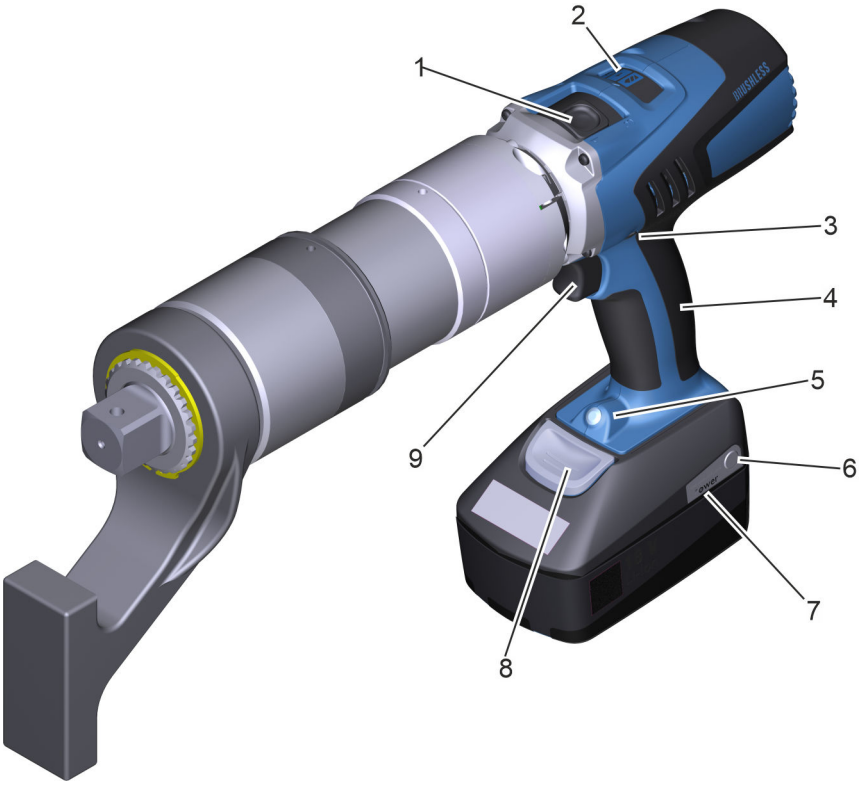

Fig. 7: Controls on the DA2power and DA2docu

1 Gear setting
2 Setting levels
3 Direction of rotation setting
4 Pistol grip
5 Battery charge status indicator
6 Battery charge status indicator button
7 4 LEDs for battery charge status indicator
8 Battery ejector button
9 Trigger

The nutrunner features the following controls:

Gear setting and setting levels

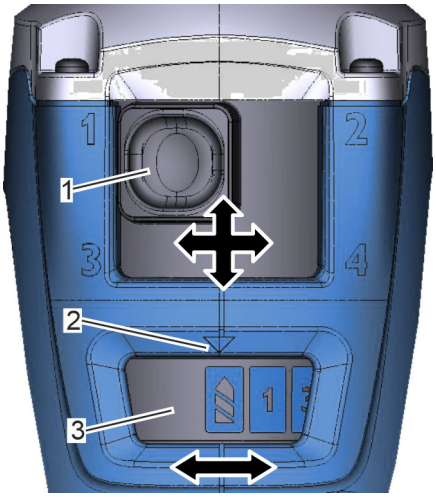

Fig. 8: Gear setting and setting levels

1 Gear setting
2 Marking for setting level
3 Setting levels

The torque is selected using a combination of gear and setting level.

Note the enclosed torque chart.

Gear: Gear 1 to 4

The gearbox gears are adjusted manually.

The highest torque is obtained in gear 1.

Setting level: Level 1 to 15

The potentiometer is adjusted electronically.

The highest torque is obtained in level 15.



Breakaway torque level:

The breakaway torque level is located at the start and end of the setting level scale .

The breakaway torque level must not be used to tighten the bolted connections.

Direction of rotation setting



Fig. 9: Direction of rotation setting (1)

The direction of rotation can be changed with the aid of the direction of rotation setting (Fig. 9/1).

Standard direction of rotation: Right-hand thread

	Direction of rotation setting	Direction of rotation
	Right-hand side is pressed.	Clockwise (CW) Tightening in clockwise direction
	Middle position	No rotation possible. Transport position

	Direction of rotation setting	Direction of rotation
	Left-hand side is pressed.	Anti-clockwise (CCW) Loosening in anti-clockwise direction

Pistol grip

The nutrunner can be gripped securely and carried by the pistol grip (Fig. 7/4). Ergonomic use of the trigger is possible.

DA2*safety* carry handle

safety

The nutrunner can be held securely and carried by the DA2*safety* turnable carry handle (Fig. 4/2). Ergonomic use of the second trigger (Safety-Start-trigger, Fig. 4/1) is possible.

DA2*safety* carry handle quick-release lock

safety

Use the quick-release lock (Fig. 4/3) to easily turn the carry handle on the DA2*safety* through 360° to move it into a comfortable position.

Handle (with angular gearbox)

The handle (Fig. 3/3) offers an additional option for securely holding and transporting the nutrunner. The DA2*power* and DA2*docu* with angular gearbox come with the handle as standard.

Battery charge status indicator



Fig. 10: Battery charge status indicator

1 Battery charge status indicator
2 Button and 4 LEDs for charge status indicator
3 Battery ejector button

A proactive battery charge status indicator is fitted below the handle of the nutrunner. The white LED (Fig. 10/1) warns the user of insufficient battery capacity, thereby preventing a sudden loss of torque and faulty bolted connections.

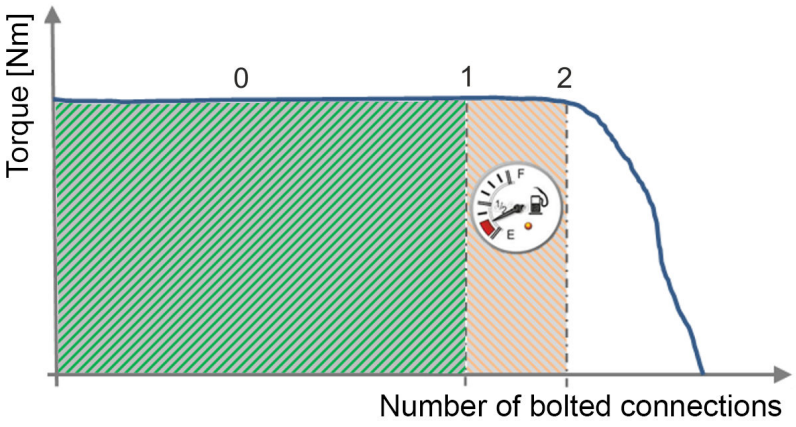

Fig. 11: Charge status

Level	LED	Meaning
0	LED is not illuminated	Battery charged.
1	LED flashing slowly	There is still approx. 30% of the usable battery capacity available. It is still possible to tighten the bolted connections with the set torque.
2	LED flashing rapidly	Battery capacity is no longer sufficient to achieve the set torque. The nutrunner switches off automatically. It is no longer possible to continue working. The results of further bolted connections are NOK.

Button and LEDs for charge status indicator



Fig. 12: LED display and charge status indicator button

The battery charge status can only be displayed correctly when the drive motor is switched off.

The battery charge status is displayed (as a percentage) by pressing the button.

LED	Meaning
1 to 4 LEDs light up green	The charge status is displayed as a percentage: 25% – 50% – 75% – 100%
LED lights up red continuously	The battery is empty. Charge the battery.
LED flashes red	The battery is not operational. Bring the battery to within the operating temperature range and then charge it.

Battery release button

The battery is released from the nutrunner using the release button (Fig. 10/3) and can be removed.

Trigger

power docu

The set fastening operation is initiated with the trigger (Fig. 7/9) and is executed for as long as the trigger is pressed.

Safety-Start-trigger (SST) – two-hand controls on DA2*safety*

To start the DA2*safety* using the Safety-Start-triggers (SST) 1 and 2, you need to use both hands.

The set fastening operation is started and executed for as long as both triggers (Fig. 4/1 and 5) are kept pressed simultaneously. When only one trigger is pressed, the nutrunner stops.

To start a new fastening operation, both triggers first need to be reset.

Do not pulse!

Do not pulse!

(Press and release the trigger in quick succession)

Always execute the fastening operation in full. To this end, press and hold the trigger for the entire duration of the fastening operation.

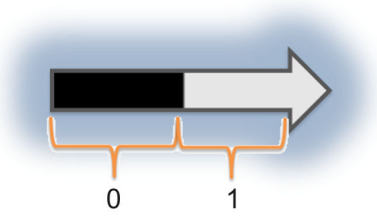

The trigger operates digitally. The drive is off when the trigger is pressed to a point (0). 100% of the torque is available beyond this (1). The trigger does not need to be operated sensitively. This facilitates use in the event of prolonged utilisation and if gloves are worn.

LED display for battery charger

LED display		Meaning
	Continuous yellow light	The battery charger is operational. Mains voltage is available.
	Flashing green light	Quick charging is active.
	Continuous green light	Quick charging has concluded.
	Flashing red light	Charging is not possible. Potential causes: ■ The contacts are dirty. Measure: Clean the contacts by inserting and removing the battery multiple times. ■ The battery is faulty. Measure: Replace the battery.

LED display		Meaning
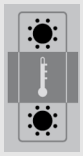	Flashing green light and flashing red light	The battery temperature is located outside the charging temperature range of +5 to +45°C. If the battery reaches the permissible charging temperature range, quick charging is initiated.

2.6 Overview of functions

The DA2 nutrunner versions offer the following functions:

DA2*power*

- Tightening and loosening
- Torque can be set via 4 gears and 15 setting levels
- Trigger with On/Off switch function
- Diagnostic Setting Software DSS (option)
  - Read out data from the nutrunner. (Bolted connection documentation)
  - Block individual torque levels.
  - Update the firmware.
  - Save the status report as a PDF file.
- Automatic safety swivel joint
- Automatic release function

DA2*docu*

- Tightening and loosening
- Torque can be set via 4 gears and 15 setting levels
- Trigger with On/Off switch function
- Accessing to data stores with PLARAD-DA2-Windows® software or PLARAD-DA2 app
  - Setting fastening operations
  - Retrieving operating data and bolted connection documentation including GPS data
  - Adjusting settings
- Diagnostic Setting Software DSS (option)
  - Read out data from the nutrunner. (Bolted connection documentation)
  - Block individual torque levels.
  - Update the firmware.
  - Save the status report as a PDF file.
- Automatic safety swivel joint
- Automatic release function

DA2*safety*

safety

DA2*safety* matches the *docu* features.

Automatic safety swivel joint

The safety swivel joint between the drive motor and gearbox makes it possible to rotate the handle into any position you wish. As soon as the torque on the handle exceeds 2 Nm, the safety swivel joint is automatically locked such that no reaction force is applied to the user's hand.

If the nutrunner is switched off, the safety swivel joint is unlocked again and can be rotated freely.

Automatic release function

Load on the gearbox is relieved after the bolting process. The reaction arm retracts slightly. This makes it easier to remove the nutrunner from the bolt and facilitates further work.

PLARAD-DA2 software/app

docu

The Windows®-PLARAD-DA2 software or PLARAD-DA2 app for iOS and Android terminal devices allows you to retrieve information on the bolted connections made with the DA2*docu* from the nutrunner and to adjust settings.

Software – DSS (option)

Diagnostic Setting Software DSS (option)

Information about the nutrunner can be read out from the nutrunner and the nutrunner can be configured.

2.7 Upgrade

power

You can upgrade DA2*power* nutrunners to DA2*docu* nutrunners by enabling the additional functions.

Contact PLARAD® service.

2.8 Accessories

The following accessories are available for ordering together with the nutrunner and may be included in the delivery:

- Impact wrench socket with circlip (spring clip)
- Reaction arm with circlip
  Special reaction arm
  Extensions
- “Torque Control TC1” mobile measuring unit
- Impact wrench sockets in various designs
- Certificate
  Technical, more detailed supplement to the torque chart
- Offset gears for long studs

Special accessories

Contact PLARAD® service.

2.9 Offset gear accessories

Reference number pA# 83103

2.9.1 Overview

Versions

Three versions of PLARAD® offset gears are available.

For more details, visit *https://www.plarad.de/download-center.html*

Illustration example STX

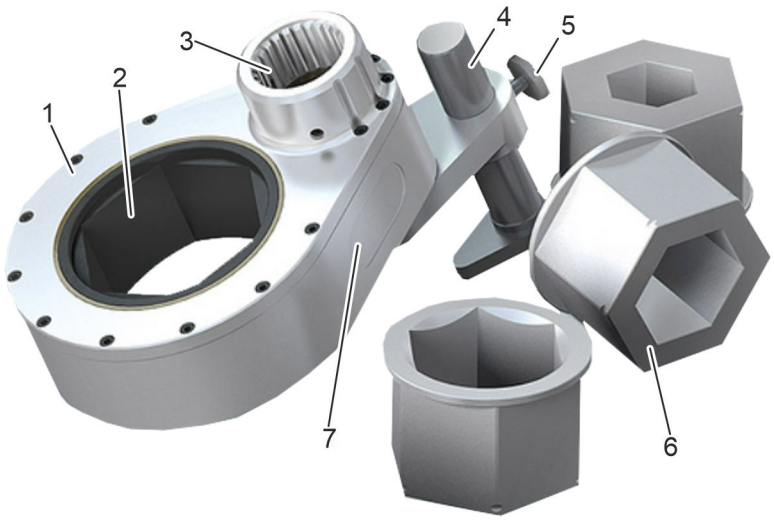

Fig. 13: Illustration example STX

1 STX offset gear
2 Hexagon insert
3 Square drive holder
4 Offset gear brace
5 Locking screw
6 Hexagon reducer pieces
7 Rating plate

Brief description

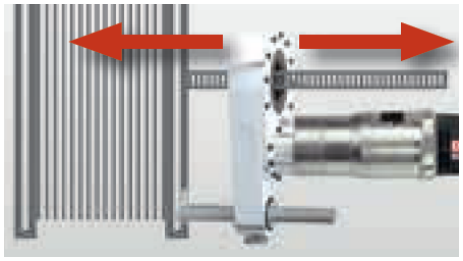

Fig. 14: Example: long threaded spindles

Offset gears let you perform fastening operations in spaces that are too small to accommodate a nutrunner directly above the bolt. The nutrunner's square drive and hexagon insert for bolting are off-set to one side.

Offset gears facilitate screwing nuts along long threaded spindles (Fig. 14).

No torque chart

The following applies to ST2xxx offset gears:

The adapted transmission ratio means that no separate torque chart is required for the offset gear.

Input torque = output torque

There is the option of creating a factory certificate.

Technical data sheet

Technical data sheet is available online at: https://www.plarad.de/download-center.html

Rating plate

The rating plate lists the following data:

- Name of the manufacturer including their full address
- Type designation
- Article/serial number
- Maximum torque
- Year of construction
- Weight
- Gear reduction

x – Conversion of the rotation angle

The rotation angle of the square drive and the hexagon insert differ by multiplier x.

Multiplier x is specified for each offset gear in the following locations:

- Rating plate
- Technical data sheet

2.9.2 Installing the offset gear

Personnel:
- Qualified nutrunner personnel

Protective equipment:
- Protective work clothing
- Safety shoes

The following section outlines the installation of an ST2 offset gear on nutrunners from PLARAD® tool generation DE1, DA2, DP1.

1. Dismantle the union nut and remove the two retaining rings.
2. Dismantle the O-ring behind the serration of the planetary gear.
3. Attach the union nut.
4. Insert the retaining ring without serration. Position the centring spigot facing the gearbox.
5. Insert the retaining ring with serration. Position the centring spigot facing the gearbox.
6. Attach the offset gear and insert the nutrunner into the offset gear holder by turning the square drive.
7. Tighten the union nut by hand.

2.9.3 Using an offset gear

Personnel:
- Qualified nutrunner personnel

Protective equipment:
- Protective work clothing
- Safety shoes

Further details *Chapter 5 'Preparing the nutrunner' on page 52*.

Preparing the offset gear

1. Choose an offset gear suitable for the bolting operation.
2. If necessary, insert a hexagon reducer piece into the offset gear's hexagon.
3. Insert the offset gear's brace. Securely tighten the offset gear brace's locking screw.

   If there are bracing panels available, use these to brace the nutrunner.
4. Attach the offset gear to the bolted connection.

Offset gear brace

5. Brace the offset gear. To do so, loosen the locking screw, position the offset gear's braces on a suitable bracing surface and securely tighten the locking screw.
6. Attach the nutrunner's square drive.

   ⇨ The offset gear is ready to perform bolting.



Note the direction of rotation. Configure the nutrunner correctly.

2.9.4 Dismantling the offset gear

Personnel:
- Qualified nutrunner personnel

Protective equipment:
- Protective work clothing
- Safety shoes

The following section outlines the dismantling of an ST2 offset gear on nutrunners from PLARAD® tool generation DE1, DA2, DP1.

1. Loosen the union nut.
2. Remove the nutrunner from the offset gear holder.
3. Remove the retaining ring with serration.
4. Remove the retaining ring without serration.
5. Remove the union nut.
6. Install the O-ring behind the serration of the planetary gear.
7. Insert the two retaining rings and secure the union nut.

2.9.5 Maintaining an offset gear

Improperly performed maintenance tasks



WARNING!

Danger of injury from improperly performed maintenance tasks!

Improper maintenance can cause serious injuries and significant damage.

- Ensure sufficient assembly space prior to commencing the tasks.
- Ensure that the assembly site is clean and tidy. Loosely stacked or randomly scattered components and tools may cause accidents.
- With regard to maintenance tasks, only allow “Lubricate”, “Clean” and “Check for damage” to be performed by the user.
- Have all repairs performed by the manufacturer.
- Use only PLARAD® original parts.

Maintenance tasks

If routine checks reveal increased wear, shorten the requisite maintenance intervals according to the actual signs of wear. If you have questions about maintenance tasks and intervals, contact PLARAD® service.

Interval	Maintenance task	Personnel
Before and after every use	■ Clean. ■ Check surfaces, warning symbols and pictograms for damage. ■ Check all components for damage and correct operation.	User
Every month if used frequently	If there are any grease nipples, lubricate with Molykote LT165 or Molykote BR2.	User
Once a year	If there are any grease nipples, lubricate with Molykote LT165 or Molykote BR2.	PLARAD® service

Accessories, spare parts and wear parts

Spare parts must meet the technical requirements specified by PLARAD®. This is always ensured by original spare parts. A warranty can only be provided for original spare parts supplied by PLARAD®.

The installation or use of other spare parts can, under certain circumstances, adversely alter the specified design properties and, consequently, impair active or passive safety.

Any liability and warranty for damage resulting from the use of parts other than the original spare parts and accessory parts is excluded.

Have at least the following information about the nutrunner to hand to enable quick and easy processing:

- Client
- Serial number of offset gear
- Desired spare part
- Desired quantity
- Desired mode of shipping

'PLARAD® service' on page 4

Offset gear maintenance by the user

Personnel: ■ User

Perform the following maintenance steps before and after every use:

Cleaning

1. **NOTICE!**
   Damage from improper cleaning!

   Clean the offset gear with a soft cloth. Never use strong cleaning agents, water, brushes, sharp-edged tools or high-pressure cleaners.

   WARNING!
   Fire hazard!

   When using isopropyl alcohol, do not clean the offset gear near ignition sources. Do not smoke. Let it evaporate.

Surfaces and markings

2. Check surfaces and markings for damage. Arrange for repairs if there is damage or illegible markings.

Checking components

3. Check all components (offset gear, head, interchangeable inserts, reducer pieces, offset gear braces, safety splints, circlips etc.) for damage, deformation and correct operation. Arrange for exchange if there is damage.

4. **WARNING!**
   Danger of injury from faulty offset gear!

   Do not use the offset gear if it is faulty. Have it repaired immediately or have the faulty parts exchanged. Contact PLARAD® service.

Lubricating

If an offset gear with grease nipples is used frequently, lubricate it once a month.

1. Squeeze Molykote LT165 or Molykote BR2 lubricant into the grease nipple with a grease gun.
2. Dispose of excess lubricant properly.

3. Clean the offset gear and work environment. Dispose of cleaning agents and excess lubricant in an environmentally sound manner.

3 Before you begin – safety

This section provides an overview of all safety aspects that are essential to the best possible protection of the personnel and the safe and trouble-free operation of the machine. Additional safety instructions for specific work tasks are contained in the sections regarding the individual life stages of the machine.

3.1 Symbols in this manual

Safety warnings

Safety warnings in this manual are indicated by symbols. Safety warnings are introduced by signal words that identify the severity of the hazard.



DANGER!
This combination of symbol and signal word indicates an immediate danger that will cause serious injury or death if not avoided.



WARNING!
This combination of symbol and signal word indicates a potential danger that may cause serious injury or death if not avoided.



CAUTION!
This combination of symbol and signal word indicates a potential danger that may cause minor or slight injury if not avoided.



NOTICE!
This combination of symbol and signal word indicates a potential danger that may cause damage if not avoided.



ENVIRONMENT!
This combination of symbol and signal word indicates potential pollution of the environment.

Safety warnings in step-by-step instructions

Safety warnings may apply to specific, individual instructions. Such safety warnings will be embedded in the list of instructions to maintain readability when executing the respective action. The signal words listed above are used.

Example:

1. Loosen the bolt.
2. 

CAUTION!
Risk of getting trapped by lid!

Close lid carefully.

3. Tighten the bolt.

Tips and recommendations



This symbol highlights useful tips and recommendations as well as information to help you use your equipment efficiently and without disruption.

Other markings

The following markings are used in this manual in order to highlight instructions, outcomes, lists, references and other elements:

Marking	Explanation
→	Step by step instructions
⇨	Outcomes of steps
🔗	References to sections of this manual and to other applicable documents
■	Lists without a fixed order
[Button]	Controls (e.g. buttons, switches), indicators (e.g. signal lamps)
'Display'	Display elements (e.g. on-screen buttons, assignment of function keys)

3.2 Symbols on the nutrunner

Overview

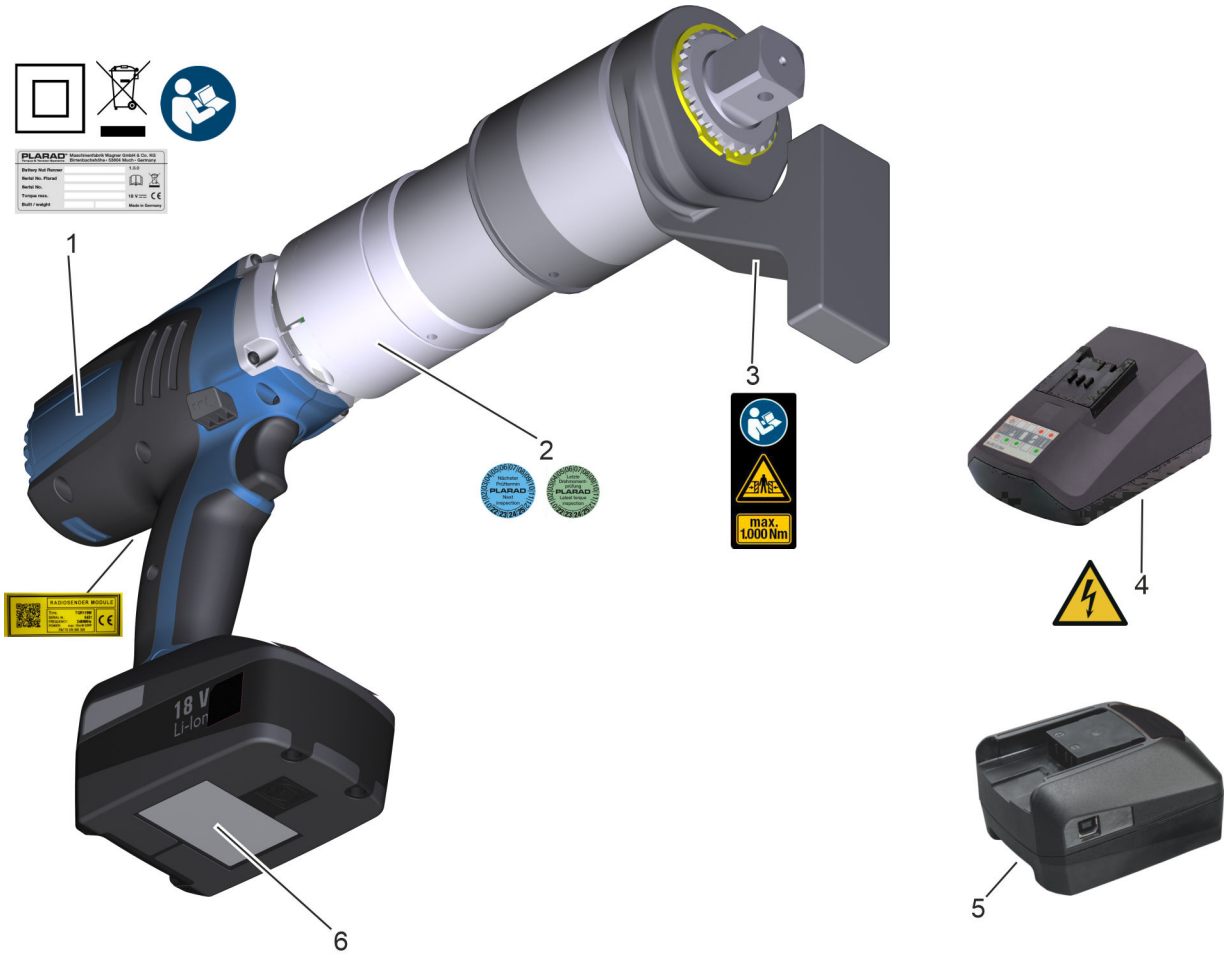

Fig. 15: Symbols

1 Nutrunner rating plate
2 Test badges
3 DA2 reaction arm
4 Battery charger rating plate
5 Programming adapter rating plate
6 Battery rating plate
Notes on the radio module, device ID (for DA2*docu* only)

Illegible signage

WARNING!

Danger in the event of illegible signage!

Over time, signs and stickers can become dirty or be rendered unrecognisable by other means, such that hazards cannot be recognised and necessary operating instructions cannot be followed. This creates a danger of injury.

– Keep all safety notices, warnings and operating instructions in a clearly legible state at all times.
– Replace damaged signs and stickers immediately.

The following symbols and information notices are located on the nutrunner:

Voltage



The equipment marked in this way is supplied with electrical energy.

Do not open the nutrunner.

Danger of crushing



Keep your hands away from areas bearing this warning.

There is a danger of body parts being crushed, pulled in or otherwise injured.

It is necessary to pay greater attention when performing work at the marked locations.

Follow the manual



Read the operating instructions prior to using the nutrunner.

Protection class II

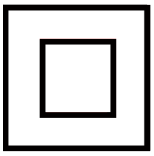

This symbol indicates protection class II. Equipment of protection class II has reinforced insulation between active and touchable parts.

Separate collection



Do not dispose of waste electronic and electrical equipment marked with this symbol in household waste.

Test badges

The test badges state the dates of the respective tests.



Date of the next PLARAD® inspection



For nutrunners with certificate:

Date of the last torque inspection

Reaction arm



The stated value indicates the maximum permissible torque for the reaction arm.

Radio module

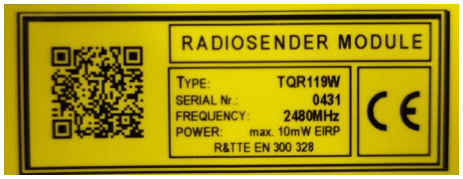

Notes on the radio module.

The nutrunner's *'SERIAL no.'* (device ID) is used when registering for data transfer.

3.3 Intended use

The battery nutrunner DA2 is a hand-held tool and may only be used for tightening and loosening bolted connections within the defined specifications (↳ *Chapter 17 'Technical data' on page 104*).

The nutrunner may only be used in a commercial setting and must not be used in a potentially explosive atmosphere.

The nutrunner may only be used in a dry environment.

Intended use includes compliance with all of the stipulations in this manual.

WARNING!

Danger of injury due to unadjusted torque levels!

The assignment of torque level (power level) and torque was determined on a test joint according to ISO 5393 (medium joint). If these values do not correspond to the actual fastening operation, this could result in injuries and damage.

– Determine the specific fastening operation and adjust the torque levels.
↳ *Chapter 4 'Determining the bolting process' on page 51*

3.4 Misuse

Any use beyond the intended use as well as any other use is considered misuse.

WARNING!

Danger in the event of misuse!

Misuse of the nutrunner can lead to dangerous situations.

- Never operate without the reaction arm.
- Do not operate the nutrunner as a driving motor.
- Do not operate the nutrunner in continuous operation.
- Never subject the nutrunner, bolts or accessories to loads exceeding the permitted torque.
- Never use to tighten pre-tightened bolts.
- Never operate unless properly braced.
- Never disregard protection ratings.
- Never operate outside the permissible environmental conditions.
- Never carry out fastening operations that have not been considered in the torque chart.
- Do not “pulse” (briefly start up the nutrunner multiple times).
- Never operate with batteries other than the original batteries supplied by the manufacturer.
- Do not switch on the nutrunner in a damp environment.
- Never change the gear setting or setting levels during operation.

3.5 General safety instructions for electric tools

EN 62841-1

Safety instructions as per EN 62841-1 VDE 0740-1:2016-07

Electric motor-operated hand-held tools, transportable tools and lawn and garden machinery – Safety Part 1: General requirements

Read all safety information, instructions, illustrations and technical data provided with this electric tool. Failure to comply with the following instructions could cause electric shock, fire and/or serious injuries.

Keep all safety information and instructions for future reference.

The term “electric tool” used in the safety instructions refers to mains-operated electric tools (with mains lead) or to battery-operated electric tools (without mains lead).

3.5.1 Workplace safety

- Keep your work area clean and well lit.
  Untidiness and unlit work areas can cause accidents.
- Do not work with the electric tool in potentially explosive environments in which there are flammable liquids, gases or dusts.
  Electric tools generate sparks that could ignite the dust or fumes.
- Keep children and other persons away from the electric tool while it is in use.
  You could lose control of the electric tool if you are distracted.

3.5.2 Electrical safety

- The plug of the electric tool must fit into the socket. The plug must not be modified in any way. Do not use any adapter plugs together with any electric tools connected to protective earth.
  Unmodified plugs and suitable sockets reduce the risk of electric shock.
- Avoid bodily contact with earthed surfaces such as pipes, heaters, stoves and refrigerators.
  There is an increased risk of electric shock if your body is earthed.
- Keep electric tools away from rain and moisture.
  If water penetrates an electric tool, the risk of electric shock increases.
- Do not misuse the power cable by using it to carry or hang up the electric tool, or to pull the plug out of the socket. Keep the power cable away from heat, oil, sharp edges and moving parts.
  Damaged or entangled power cables increase the risk of electric shock.
- If you are working outdoors with an electric tool, only use extension cables that are suitable for use outdoors.
  The use of an extension cable suitable for use outdoors reduces the risk of electric shock.
- If operation of the electric tool in a damp environment is unavoidable, use a residual current-operated circuit breaker.
  The use of a residual current-operated circuit breaker reduces the risk of electric shock.

3.5.3 Personal safety

- Be attentive, pay attention to what you are doing, and take the utmost care when working with an electric tool. Do not use any electric tools if you are tired or are under the influence of drugs, alcohol or medicines.
  A moment of inattention when using the electric tool could result in serious injuries.
- Wear personal protective equipment and always wear safety goggles.
  The wearing of personal protective equipment, such as a dust mask, non-slip safety shoes, hard hat or hearing protection, reduces the risk of injury depending on the type and use of the electric tool.
- Avoid unintentional commissioning. Ensure that the electric tool is switched off before you connect it to the power supply and/or the battery, pick it up or carry it.
  If you have your finger on the switch when carrying the electric tool or if you connect the electric tool to the power supply when it is switched on, this can result in accidents.
- Remove the adjustment tools or spanner before you switch on the electric tool.
  A tool or spanner that is in a rotating part of the electric tool can cause injuries.
- Avoid adopting an unnatural posture. Ensure you have a secure footing and maintain your balance at all times.
  This gives you better control of the electric tool in unexpected situations.
- Wear suitable clothing. Do not wear any loose clothing or jewellery. Keep your hair and clothes away from moving parts.
  Loose clothing, jewellery and long hair can get caught in moving parts.
- Do not be lulled into a false sense of security and do not disregard the safety rules for electric tools, even if you are familiar with the electric tool from having used it many times.
  Careless conduct can cause serious injuries in a split second.

3.5.4 Using and handling the electric tool

- Do not overload the electric tool. Use the designated electric tool for your work.
  You can work better and more safely within the specified power range with the right electric tool.
- Do not use any electric tools with a faulty switch.
  An electric tool which can no longer be switched on or off is dangerous and must be repaired.
- Unplug the plug from the socket and/or remove a removable battery before you make any device settings, exchange any plug-in tool parts or put away the electric tool.
  This precautionary measure prevents the electric tool from starting up unintentionally.

- Store unused electric tools out of reach from children. Do not allow any person to use the electric tool if the person in question is not familiar with the electric tool or if they have not read the instructions.
  Electric tools are dangerous if they are used by inexperienced persons.
- Take good care of electric tools and plug-in tools. Check that moving parts are functioning flawlessly and do not jam; check whether parts are broken or damaged in such a way that the function of the electric tool is impaired. Have damaged parts repaired prior to using the electric tool.
  Many accidents are caused by poorly maintained electric tools.
- Use electric tools, plug-in tools etc. in accordance with these instructions. In this regard, give due consideration to the working conditions and to the work to be performed.
  Use of electric tools for purposes other than the intended uses can lead to dangerous situations.
- Keep handles and gripping surfaces dry, clean and free of oil and grease.
  Slippery handles and gripping surfaces mean that safe operation and control of the electric tool is not possible in unforeseen situations.

3.5.5 Service

- Have your electric tool repaired by qualified specialist personnel without exception and using only original spare parts.
  This ensures that the safety of the electric tool is maintained.

3.6 Residual risks

The following section outlines the residual risks potentially posed by the nutrunner even when it is used as intended.

To reduce the risks of personal injury and property damage and to avoid dangerous situations, observe the safety instructions listed here and the safety instructions in the other sections of this manual.

3.6.1 Electrical dangers

Electrical current



DANGER!

Danger of death due to electric shock!

If contact is made with live parts, there is an immediate danger of death due to electric shock. Damage to the insulation or individual components can be life-threatening.

- Do not open the nutrunner.
- If the housing is damaged, disconnect the battery from the nutrunner immediately and arrange for repair.
- Never operate the nutrunner if the trigger is faulty.
- Keep moisture away from live parts. Moisture can cause short circuits.
- Never operate the battery charger with a mains voltage and mains frequency other than those specified on the rating plate.
- Only operate the nutrunner with original batteries supplied by the manufacturer.
- Ensure that the power supply complies with local regulations.
- Never make modifications to the nutrunner, battery or battery charger.
- Never modify the power plug or power cable for the battery charger.
- Only operate the battery charger at suitable power sockets.
- Never operate after the test period has passed. See the test seal regarding the date for the next test.
- Never operate in a potentially explosive atmosphere.
- Keep away from moisture, liquids, steam, dust and coarse contamination.

  Do not switch on in a damp environment or in the rain.
- If possible, operate the battery charger with a residual current-operated circuit breaker installed.
- When charging the battery charger with mobile power generators, ensure continuous and constant compliance with the specified values for voltage, frequency, sufficient power and earthing.

Batteries



WARNING!

Danger of death due to fire, explosion, smoke and toxic gases if batteries are handled incorrectly!

Incorrect handling of rechargeable batteries can result in fire, explosions and electric shock. Escaping gases or smoke can lead to poisoning and suffocation.

- Never charge batteries.
- Only use and charge batteries supplied by the manufacturer.
- Only use the charger included in the delivery to charge the battery.
- Only insert a battery with the correct polarity (+/-) in the charger. If the battery cannot be inserted properly, never use force to insert it.
- Never short-circuit the contacts (positive and negative terminal) of the battery.
- Never modify, drill, open, disassemble or subject the battery to mechanical loads.
- Never charge batteries that are clearly damaged. Do not put inflated, dropped or damaged batteries into service. Dispose of them in the proper manner.
- Never expose the battery to moisture or humidity (rain, saltwater, liquids). A humid or moist battery must not be used or charged under any circumstances.
- Avoid permanent damage due to deep discharge of the lithium-ion battery.
- Never use, charge or store the battery in places where there is a potentially explosive atmosphere or where high temperatures could occur.
- Charge lithium-ion batteries in a dry state, at room temperature and in a fireproof location.
- Do not expose to extreme heat. Do not store in the sun or in an overheated car.
- Do not throw the battery into a fire.
- Only use approved chargers.
- Only operate in the designated nutrunners.
- Do not inhale escaping gases or smoke.
- Dispose of in an environmentally sound manner.
- Transport lithium-ion batteries in accordance with the currently applicable legal regulations pertaining to dangerous goods.

EMC

WARNING!

Danger of injury due to very strong electromagnetic radiation!

Very strong electromagnetic radiation can cause the nutrunner to malfunction, resulting in serious injuries and major property damage.

– Do not operate in the immediate vicinity of strong transmitting antennas.
– Suspend use immediately and remove the battery as soon as there are signs of malfunctions.

3.6.2 Mechanical dangers

Moving components and rotational movements

WARNING!

Danger of injury due to moving components!

Moving components can cause serious injuries. There is a danger of being pulled in during rotational movements.

Dirt can be ejected from the lower ventilation slots and cause eye injuries.

– During operation, do not reach into moving components or handle moving components.
  Do not touch the reaction arm, drive shaft, impact wrench socket, nut and other moving attachment parts.
– Do not switch on the nutrunner while carrying it. Set the direction of rotation to the middle position. Transport the nutrunner in the transport case.
– Never open the nutrunner.
– Wear tight fitting work clothing that resists tearing to some degree.
– Wear safety goggles.
– Wear a protective cap (hair net) to prevent long hair from being pulled in by rotating parts.

Incorrect bracing and overloading

WARNING!

Danger of injury due to incorrect bracing, overloading, breakage!

Incorrect bracing or overloading of the nutrunner or individual components can result in serious injuries.

- Do not use the nutrunner if the bolting process is not entirely clear.
- Note the torque chart.
- Check the reaction arm for visible damage prior to use. Do not use the reaction arm if it is damaged.
- Brace the reaction arm correctly *Chapter 8 'Bracing the reaction arm' on page 59*.
- Do not operate the nutrunner in continuous operation and do not use it as a drive unit.
- Use only PLARAD® original parts.

Reaction arm

The reaction arms are designed for a maximum permissible load.

Observe the stickers on the reaction arm and data sheet.

Crushing

WARNING!

Danger of crushing when bracing and due to high weight!

During operation, very strong forces act on the nutrunner, reaction arm, bracing surface and bolts. There is a danger of crushing between the reaction arm and bracing surface during tightening and loosening. The high weight of the nutrunner can cause crushing if it falls down.

- Handle the nutrunner with care and as intended.
- Give due consideration to the weight during transport and during all work.
- Have work performed only by persons who are physically capable of using the nutrunner safely despite its high weight.
- Do not reach between the reaction arm and bracing surface.
- Secure the nutrunner against falling when working at height.
- Wear safety shoes.
- Also wear an industrial safety helmet for overhead work.

Dirt and scattered objects



CAUTION!

Danger of injury from falling over dirt and scattered objects!

People may slip on or stumble over dirt and scattered objects. Falling may cause injuries.

- Always keep the work area clean.
- If objects are no longer needed, remove them from the work area and especially if such objects are at ground level.
- Mark unavoidable stumbling points with hazard tape.
- Keep handles and gripping surfaces of the nutrunner dry, clean and free of lubricants. Clean them immediately if they are dirty.

Impact wrench sockets

NOTICE!

Property damage due to incorrect use of impact wrench sockets!

- Use impact wrench sockets suitable for the bolting process without exception.
- Ensure a flawless, positive connection between the nutrunner, impact wrench socket and bolt.

  Ensure that there is a positive connection between the tool holder (square drive of the nutrunner) and square drive of the impact socket wrench.

Gear setting and setting levels

NOTICE!

Property damage due to gear and setting level adjustment!

Changing the setting during operation causes property damage including destruction of the nutrunner. Changing the gear causes mechanical damage to the gearbox. Changing the setting levels results in undefined behaviour.

- Only make changes to the gear or setting level settings when the nutrunner is at a standstill.

Conserving materials

In order to prevent premature damage to tools and accessories, only use the nutrunner up to 80% of the maximum torque of the nutrunner during continuous use, if possible to do so.

Especially during loosening, loads could occur that have adversely effect durability.

Torques in excess of 80% (based on the maximum torque of the nutrunner) should only be used in exceptional cases.

3.6.3 Noise and ergonomics

Noise

WARNING!

Danger of injury from noise!

The noise level of 72 dB(A) (3 dB(A) measurement uncertainty) occurring in the work area can cause hearing damage.

– Make hearing protection available.
– Recommendation: Wear hearing protection.

Hot surfaces

WARNING!

Danger of injury from hot surfaces!

The surfaces of components, such as the drive motor or gearbox, could heat up significantly during operation. Surface temperatures of up to 80 °C could develop. Contact between the skin and hot surfaces will result in severe burns to the skin.

– Always wear protective work clothing and safety gloves when working in the vicinity of hot surfaces.

Inadequate ergonomics



CAUTION!

Damage to the musculoskeletal system due to the high weight of the nutrunner!

Lifting and carrying heavy loads can cause permanent damage to the musculoskeletal system.

- Ensure stable footing and sufficient room for movement.
- Keep your back as straight as possible. Do not lift with your upper body hunched over, bent forward, or with your back arched.
- Lift the nutrunner as close to your body as possible.
- Avoid one-sided loading. Avoid twisting your spine. Do not carry one-handed.
- Never move the nutrunner abruptly.
- Use the safety swivel joint to rotate the trigger in such a way that it is possible to work without any discomfort.
- Use suitable auxiliary devices (e.g. lifting eyes).

Inattention



WARNING!

Danger of injury due to distraction, inattention or irresponsible use!

Distraction, inattention or irresponsible use can result in losing control of the nutrunner and thus cause serious injuries.

- Always keep the work area well-lit.
- Keep children and unauthorised persons away.
- Work purposefully and in a responsible manner. Do not allow yourself to be distracted.
- Do not work if you are tired or under the influence of drugs, alcohol or medicine.
- Do not be lulled into a false sense of security. Do not disregard the safety information and instructions in this manual, even if the nutrunner seems familiar to you after frequent use.
- When the nutrunner is not in use, always store it in the transport case out of reach from children and other unauthorised persons.
- Wear the prescribed personal protective equipment.

Faulty safety devices

WARNING!

Danger of death due to inoperative safety devices!

If safety devices or safety functions are inoperative or disabled, there is a danger of serious injuries.

– Prior to commencing work, check that all safety devices are operative and correctly installed.
– Never disable or bypass safety devices or safety functions.

The nutrunner is equipped with the following safety devices and safety functions:

- Automatic safety swivel joint
  The safety swivel joint prevents reaction forces acting on the wrist.
- Automatic release function
  Load on the gearbox is relieved after the fastening operation. The nutrunner can be removed more easily.
- Insulation of the power cable for the charger
- Protection class 2
- Insulated handle
- Overheating protection for drive motor
  The drive motor switches off at the maximum temperature
- Undervoltage detection
  The nutrunner switches off if there is undervoltage (loss of power).
- Automatic start-up protection
  The nutrunner is protected against automatic start-up when the power supply is switched on.
- Start-up protection/transport position
  The nutrunner is protected against unintentional start-up in the middle position of the direction of rotation setting.
- Reaction arm circlip
  The reaction arm is protected against outward ejection by means of a circlip.
- Spring clip for impact wrench socket
  The impact wrench socket is secured against outward ejection by means of a spring clip on the square drive of the nutrunner.
- Acoustic signal
  Indicates that a fastening operation has been completed correctly or indicates a faulty fastening operation.
- Password protection
  PLARAD-DA2 software or app: The nutrunner configuration is access-protected by different password levels.

DA2*safety*

Additional safety devices:

- Safety-Start-trigger (SST):
  The nutrunner automatically stops whenever one of the two triggers is released.
- Flexibly adjustable to right-hand or left-hand operation thanks to the turnable handle
- Control switches ergonomically arranged in the nutrunner's centre of gravity
- Additional sturdy carry handle

3.7 Operator's obligations

The nutrunner is used in the commercial sector. The operator of the nutrunner is therefore subject to the statutory obligations pertaining to occupational safety.

In addition to the safety instructions in this manual, the applicable safety, occupational safety and environmental protection regulations for the nutrunner's area of application must be adhered to.

The following specifically applies in this regard:

- The operator must familiarise themself with the applicable occupational safety regulations and, as part of a risk assessment, determine additional dangers that arise as a result of the specific operating conditions at the operating site of the nutrunner. This risk assessment must be implemented in the form of safety instructions for operation of the nutrunner.
- During the entire time the nutrunner is in use, the operator must check whether the safety instructions they have compiled reflect current regulations and, if necessary, the operator must change the instructions accordingly.
- The operator must clearly define and regulate responsibilities for all work on and with the nutrunner. The authority and responsibilities of personnel regarding operation, set-up, maintenance and repair must be clearly defined.
- The operator must reliably check the use of the nutrunner and ensure that only commissioned and instructed personnel work with the nutrunner. Only allow personnel to be trained or instructed and those undertaking vocational training to work on the nutrunner under the supervision of an experienced person.
- The operator must ensure that the nutrunner is not opened and that the no work is performed on the electrical equipment by unauthorised persons.

  Work on electrical equipment may only be performed by an electrician or by trained persons under the guidance and supervision of an electrician. Adhere to electrotechnical regulations for safety reasons.
- The work environment, method of use and specific conditions of the respective bolting job may result in vibration and noise emissions to differ from those indicated.

  Measure the actual noise emissions.

  Estimate vibration loads occurring under the actual conditions of use. Take into account the relative impact of the various operating cycles.

  The operator must ensure that the applicable safety, occupational safety and environmental regulations are observed and that their limits are not exceeded. In the event of additional loads or stresses, define and implement additional safety precautions.

The operator is also responsible for ensuring that the nutrunner is in technically flawless condition at all times. The following applies for this reason:

- The operator must ensure adherence to the maintenance intervals described in this manual.
- The operator must have the functionality and integrity of all safety devices checked on a regular basis.

Data protection

When using the nutrunner, data may be recorded.

The operator must ensure that saving and processing of personal data complies with the locally applicable data protection laws.

3.8 Who is permitted to use the nutrunner?



WARNING!

Danger of injury if personnel are insufficiently qualified!

If unqualified personnel perform work on or with the nutrunner or if such persons are present in the danger zone while work is being performed, dangers arise that could cause serious injuries and considerable property damage.

– Have all tasks performed by suitable qualified personnel without exception.
– Keep unqualified personnel away from the danger zones and work areas.

User

The user of the nutrunner has the requisite knowledge and the requisite training for handling electrical tools. Furthermore, as part of training provided by the operator, the user was trained in relation to the tasks assigned to them and the potential dangers associated with improper conduct.

The user is trained in how to use the personal protective equipment, is familiar with the most important specifications, situations and information relating to the specific application and is physically capable of using the nutrunner safely despite its weight. This includes overhead work, working at heights, etc.

The user must be older than the legally permissible minimum age.

Tasks that go beyond operation during normal operation may only be carried out by the user if this is specified in this manual and the operator has expressly entrusted them with the performance of such tasks.

The user knows who their supervisor is, can contact their supervisor if they have questions or in an emergency, and is able to communicate with their supervisor.

The user is familiar with all residual risks and is trained in the practical handling of the nutrunner.

Qualified nutrunner personnel

Qualified nutrunner personnel are trained for the specific task area in which they work and are familiar with the relevant standards and regulations.

Due to their professional training and experience, qualified nutrunner personnel are able to perform work with the nutrunner, recognise and avoid potential dangers independently and convey this to users.

Specific capabilities of qualified nutrunner personnel include:

- Identify bolting processes.
- Prepare the nutrunner. Select the appropriate impact wrench socket.
- Use all functions of the nutrunner.
- Create passwords for users.
- Uphold safety, occupational safety and health protection when using the nutrunner and convey this to users.
- Identify damage on the nutrunner and arrange for repairs or get in touch with the manufacturer.
- Instruct users in the proper manner.

Operator

The operator is the person who operates the nutrunner for commercial or economic purposes themself, or makes it available for a third party to use, and who bears legal responsibility for the product vis-à-vis protection of personnel and third parties during operation.

Chapter 3.7 'Operator's obligations' on page 46

PLARAD® service

Certain work may only be performed by PLARAD® service or by personnel authorised by Maschinenfabrik Wagner GmbH & Co. KG. Other personnel are not authorised to perform this work. Contact PLARAD® service or authorised PLARAD® partners regarding performance of the work that is due.

Contact: *www.plarad.de*

Chapter 14.3 'Having service tasks performed by the manufacturer' on page 97

Unauthorised persons



WARNING!

Danger of death for unauthorised persons due to dangers in the danger zone and work area!

Unauthorised persons, who do not meet the requirements described in this manual, are not aware of the dangers in the danger zone. There is therefore a danger of serious injuries or even death for unauthorised persons.

– Keep unauthorised persons away from the danger zone and work area.
– If in doubt, address the respective persons and instruct them to leave the danger zone and work area.
– Suspend work while there are unauthorised persons loitering in the work and danger zone.

3.9 Personal protective equipment

Safety gloves



Safety gloves are used to protect the hands from friction, abrasions, punctures or deeper injuries and from contact with hot surfaces.

Safety shoes



Safety shoes protect the feet from crushing, falling parts and from slipping on slippery ground.

Hearing protection



Hearing protection is used to protect against hearing damage cause by noise.

Safety goggles



Safety goggles are used to protect the eyes from airborne parts and liquid jets.

Protective work clothing



Protective work clothing is tight fitting work clothing with a low tearing resistance, with tight sleeves and without any protruding parts.

Protective cap



The protective cap (hairnet) is used to protect the hair from being pulled in by rotating and moving parts, such as bolts.

The wearing of a protective cap is mandatory if your hair is longer than the circumference of the moving shaft.

Industrial safety helmet



Industrial safety helmets are used to protect the head from falling objects, suspended and swinging objects and from bumping into stationary objects.

An industrial safety helmet must be worn for overhead work involving the nutrunner.

3.10 Environmental protection



ENVIRONMENT!

Danger for the environment due to incorrect handling of environmentally hazardous substances!

If environmentally hazardous substances are handled incorrectly, especially if such substances are disposed of incorrectly, this could cause significant damage to the environment.

– Always adhere to the instructions given below in relation to the handling of environmentally hazardous substances and the disposal thereof.
– If environmentally hazardous substances accidentally enter the environment, adopt suitable measures immediately. If in doubt, notify the competent local authority of the damage and inquire about suitable measures to be taken.

The following environmentally hazardous substances are used:

Batteries and rechargeable batteries

Batteries and rechargeable batteries contain toxic heavy metals. They are subject to special waste treatment and must be deposited at municipal collection points or be disposed of by a specialist company.

Lubricants

Lubricants, such as greases and oils, contain toxic substances. Such substances must not enter the environment.

The nutrunner must not be lubricated by the operator. If lubricants do however escape, arrange for them to be disposed of by a specialist disposal company.

Electrical and electronic components

Electrical and electronic components contain toxic materials. These components must be collected separately and deposited at municipal collection points or be disposed of by a specialist company.

4 Determining the bolting process

Information about bolted connections

The nutrunner reacts differently to “soft” and “hard” bolted connections. Even “soft” and “hard” bolted connections react individually to each other, as the thread and lubrication state can vary from bolted connection to bolted connection.

The torque setting of the nutrunner must be made for each bolting process individually and checked directly during the bolting process.

Use a rotating, electrical measuring transducer or a calibrated torque spanner for checking purposes.



Fig. 16: Mobile measuring unit TC1

Personnel: ■ Operator

The nutrunner can only be used safely and properly if the bolting process is known.

1. Determine the bolting process. To do so:

   Determine a suitable bracing surface and select a suitable reaction arm for proper bracing.

   Determine the appropriate impact wrench socket.

2. Determine the requisite torques and angles for the bolting process.

   To this end, measure the applied torque of a bolting process, e.g. using the mobile measuring unit TC1 (not included in the scope of delivery; see available accessories).

3. Make further accessories (bracing aids, suspension etc.) available according to the situation.

5 Preparing the nutrunner

Unsecured or overloaded components

WARNING!

Danger of injury due to unsecured or overloaded components!

Unsecured components or components subjected to loads exceeding the intended use could result in uncontrolled nutrunner behaviour, outward ejection of components or breakage and thereby cause serious injuries.

– Carefully determine all parameters for a bolting process.
– Ensure that all components are used within the scope of their intended use.
  Never exceed load limits (e.g. maximum torques).
– Only use impact wrench sockets.
– Never put the nutrunner into operation if the reaction arm or impact wrench socket are unsecured.

Personnel: ■ Qualified nutrunner personnel

Protective equipment: ■ Protective work clothing
■ Safety shoes

Prior to being used for tightening or loosening, the bolting process must be known and the nutrunner must be prepared.

1. Ensure that the bolting process has been determined ↳ *Chapter 4 'Determining the bolting process' on page 51* and that all parameters are available.

2. **NOTICE!**

Property damage to the O-ring!

Carefully slide the O-ring (Fig. 17/3) onto the serration (Fig. 17/4) on the nutrunner.

3. Push the reaction arm (Fig. 17/2) onto the serration.

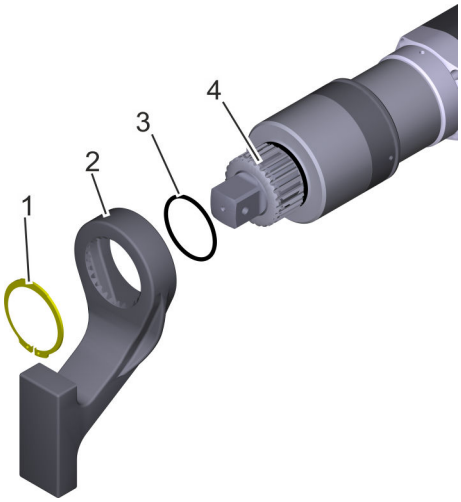

Fig. 17: Securing the reaction arm

1 Circlip
2 Reaction arm
3 O-ring
4 Serration



Fig. 18: Circlip pliers

4. Slide on the circlip (Fig. 17/1) with the aid of the circlip pliers (Fig. 18) and clamp it.

⇨ The reaction arm is secured.

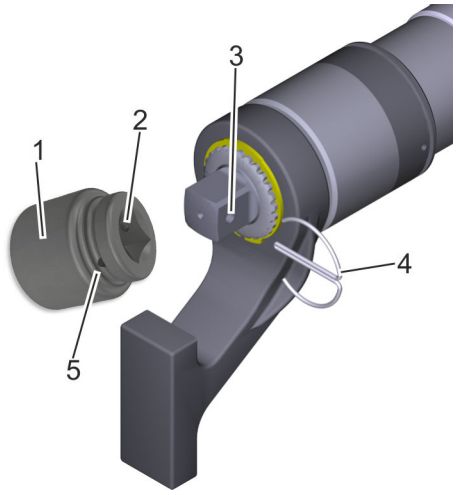

Fig. 19: Securing the impact wrench socket

1 Impact wrench socket
2 Bore
3 Square drive with bore
4 Spring clip for impact wrench socket
5 Bore

5. Attach the impact wrench socket (nut) to the square drive on the nutrunner and secure it.

To do so, push the impact wrench socket (Fig. 19/1) fully onto the square drive (Fig. 19/3). The bores (Fig. 19/2, 3 and 5) for securing must be on top of each other.

Fully insert the spring clip (Fig. 19/4) in all bores (Fig. 19/2, 3 and 5) until the ring is fully seated.

⇨ The impact wrench socket is secured.

6. Attach further accessories if such accessories have been determined for the bolting process.

6 Supplying with energy

6.1 Battery care

Battery care instructions

In order to obtain the full performance, lithium-ion batteries (Li-Ion) require care.

Battery care rules

- The first charging process is crucial. Charge the battery fully prior to first use.
- Each battery has a limited number of charge cycles. For this reason, do not recharge the battery at every opportunity. Instead, wait until a charge status of between 10% and 20% capacity before recharging.
- If the battery is discharged below its nominal voltage, the battery could be damaged or destroyed. The batteries included in the delivery therefore have electronics that warn of deep discharge and switch off the nutrunner.
- Frequent overcharging can cause permanent damage to the battery. The charger automatically concludes the charging process if the battery is fully charged. Do not connect the battery again.
- The battery can only be charged at temperatures between 5°C and 45°C. To avoid damaging the battery cells, do not charge the battery when it is cold. Let it warm up to room temperature beforehand. Charge the battery at room temperature (18°C to 21°C).
- High temperatures damage the battery. Never leave the battery or the transport case in the car or in the sunshine on hot days. The lithium-ion battery loses capacity and performance capability at temperatures above +60°C.
- Do not store lithium-ion batteries empty or fully charged for a prolonger period of time. Optimum storage at a capacity of 40% to 50% and at temperatures of 5°C to 10°C.
- Store unused batteries in a cool but not cold location. Batteries also lose energy in an unused state. The energy loss for lithium-ion batteries is approx. 3% to 5% per month.
- If a lithium-ion battery is not used for a prolonger period of time, recharge the battery after 12 months at the latest.
- Always dispose of old and used batteries in an environmentally sound manner.

Storing the battery

Optimum storage temperature: 5°C to 10°C.

Lithium-ion batteries (Li-Ion) should not be stored empty or fully charged for a prolonged period of time. Optimum storage, which was determined in an extensive series of tests, is at 40% to 50% of capacity and at low temperatures, but not below 0°C. Due to self-discharge, recharging is required every 12 months at the latest.

Battery not in use for a prolonged period of time

Disconnect the battery from the nutrunner if the nutrunner will not be used for a prolonged period of time.

Even when the device is switched off, a small current can flow that leads to a deep discharge after a prolonged period of time. Deep discharge damages the battery and, in extreme cases, will destroy it.

Self-discharge

A charge loss of 3% to 5% per month is possible for lithium-ion batteries. The self-discharge is temperature-dependent and greater at high temperatures.

Deep discharge

The capacity of the battery is fully exhausted in the event of deep discharge. In such cases, the voltage drops to as low as 0 volt.

In the battery, chemical reactions take place on the electrodes. Such reactions can render them unusable. The battery loses considerable capacity and can potentially no longer be charged. For this reason, the battery must not be discharged below a type-dependent end-of-discharge voltage and must be recharged as quickly as possible.



Do not fully discharge lithium-ion batteries and lithium-ion polymer batteries.

Good lithium-ion batteries usually have extensive protection or monitoring circuits in the battery pack that prevent deep discharging/overcharging and explosion.

Temperature range for battery operation

Temperature range for use: -10°C to +55°C

Temperature range for charging: +5°C to +45°C

The ideal temperature range for batteries is at room temperature.

A sensor in the battery ensures that no quick charging takes place outside this range.

Service life of batteries

Lithium-ion batteries can be charged up to 1,000 times (capacity-dependent). This value is only achieved under optimum conditions.

The number of cycles could decrease depending on battery treatment and care. The capacity decreases over the course of the service life.

Batteries should generally be replaced below 70% nominal capacity.

Memory effect, lazy battery effect

Lithium-ion batteries and lithium-ion polymer batteries can and may be recharged at any time. These batteries do not have any memory effect. It is only necessary to avoid frequent brief charging. Even full charging in several stages, with or without partial discharge in between stages, does no harm.

Lithium-ion batteries and lithium-ion polymer batteries must not be fully discharged.

6.2 Charging the battery

The first time

Charge the battery fully prior to first-time use.

Electrical current

DANGER!

Danger of death due to electric shock!

Touching live parts poses an immediate danger of death due to electric shock. Damage to the insulation or individual components can be life-threatening.

- If the housing is damaged, disconnect it from the power supply immediately and arrange for repair.
- Keep moisture away from live parts. Moisture can cause short circuits.
- Never operate with a mains voltage and mains frequency other than those specified on the rating plate.
- Ensure that the power supply complies with local regulations.
- Never modify the power plug or power cable.
- Only operate at suitable power sockets.
- Never operate after the inspection period has elapsed. See the test seal for the date of the next test.
- Keep away from moisture, liquids, steam, dust and coarse contamination.

  Do not switch on outdoors, in a damp environment or in the rain.
- During operation with mobile power generators, ensure continuous and constant compliance with the specified values for voltage, frequency, sufficient power and earthing.

Battery charger



Fig. 20: Charging the battery

The batteries (Fig. 20/2) can be charged using the battery charger (Fig. 20/1) included in the scope of delivery.

Setting up the charger

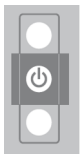

1. Set up the battery charger in a cool, dry place and connect it to a power socket.
   ⇨ If the yellow continuous light is illuminated, mains voltage is present and the battery charger is operational.

Inserting the battery

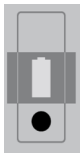

2. Carefully slide the battery onto the battery charger.
   ⇨ The charging process begins.
   If the green continuous light is illuminated, the battery is fully charged.

Using the battery

3. Pull the battery off the battery charger.

6.3 Connecting the nutrunner to the battery

A charged battery needs to be inserted prior to using the nutrunner.

Charge status

1. Ensure that the battery is charged. Press the battery charge indicator button in order to check the charge status.

Inserting the battery

2. Carefully slide the battery into the nutrunner until the locking mechanism clicks into place.
   ⇨ The nutrunner is operational.

Replacing the battery



Fig. 21: Unlocking the battery

3. In order to remove the battery, press the battery ejector button (Fig. 21/1) and pull out the battery.
   Insert a charged battery.

7 Setting the torque levels

Gear setting and setting levels

NOTICE!

Property damage due to gear and setting level adjustment!

Changing the setting during operation causes property damage including destruction of the nutrunner. Changing the gear causes mechanical damage to the gearbox. Changing the setting levels results in undefined behaviour.

– Only make changes to the gear or setting level settings when the nutrunner is at a standstill.

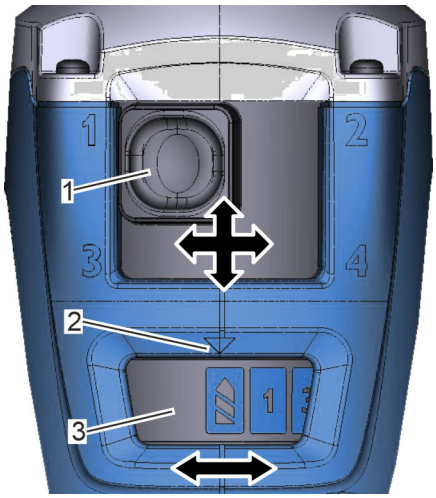

Fig. 22: Gear setting and setting levels

1 Gear setting
2 Marking for setting level
3 Setting levels

For each fastening operation, the correct torque level must be determined and the gear and setting level must be set accordingly on the nutrunner.

1. Determine the torque ↳ *Chapter 4 'Determining the bolting process' on page 51*.
2. Find a suitable combination of gear and setting level using the torque chart (performance table) provided.
3. Set gear (Fig. 22/1) 1 to 4 (manual gearbox setting).
4. Set setting level (Fig. 22/3) 1 to 15 (electronic setting).

   In order to select the breakaway torque level, turn the setting level scale to at the start or end. The torque of the breakaway torque level is roughly 15% greater than the torque of setting level 15.

   ⇨ The desired torque level is now set.

DA2 nutrunner in performance levels 05 and 10:

The 4th gear (high-speed gear) is not suitable for controlled tightening.

8 Bracing the reaction arm

Reaction arm

Torques can only be generated if the reaction forces are absorbed. The reaction arm fulfils this function on the nutrunner:

The scope of delivery for the nutrunner contains a standard reaction arm. The nutrunner may only be used with the reaction arm included in the delivery.

For bolting processes for which the standard reaction arm is unsuitable, contact PLARAD® service.

Incorrect bracing and overloading



WARNING!

Danger of injury due to incorrect bracing, overloading, breakage!

If the nutrunner is not sufficiently braced, it can slip out of place and be ejected. Any point contact between the reaction arm and the corners of a bracing element can cause considerable forces to act on the nutrunner. Incorrect bracing or overloading of the reaction arm, bolts or other components can result in serious injuries and damage to the nutrunner.

- Do not use the nutrunner if the bolting process is not entirely clear.
- Note the torque chart.
- Check the reaction arm for visible damage prior to use. Do not use the reaction arm if it is damaged.
- Brace the reaction arm correctly. Note the following instructions regarding bracing.
- Always ensure that the reaction arm is in full contact with the surface.
- Use only PLARAD® original reaction arms.

Bracing



Fig. 23: Bracing the reaction arm correctly

1 Reaction arm
2 Starting rotation angle
3 Bracing surface

1. Find the ideal bracing surface for the bolting process. Ensure that the reaction arm (Fig. 23/1) is in full contact with the bracing surface (Fig. 23/3) and cannot slip out of place. Note the starting angle of rotation (Fig. 23/2).

If the standard reaction arm is not suitable for this, use a suitable reaction arm. If you have questions, contact PLARAD® service.

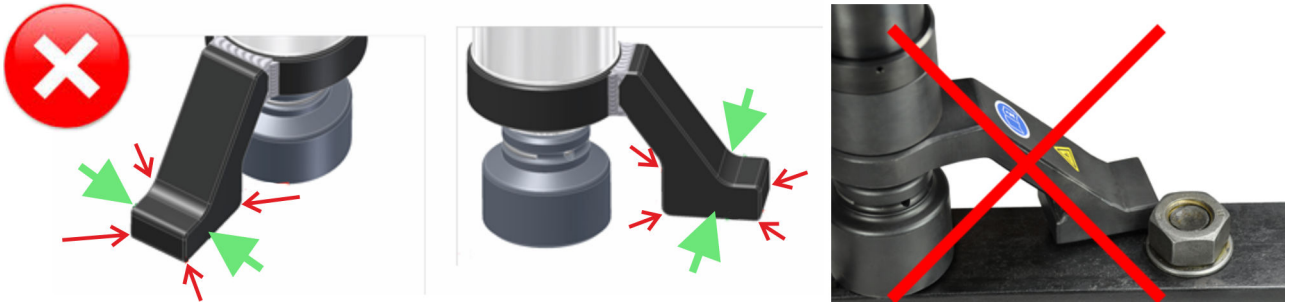

Fig. 24: Reaction arm braced incorrectly

→ Correct bracing point
→ Incorrect bracing point

2. Ensure that only the points (Fig. 24) marked with → absorb the torque and are in full contact.

9 Tightening and loosening using the DA2*safety*

safety

Always press both Safety-Start-triggers at the same time.



1 Safety-Start-trigger (SST) 2
2 Turnable carry handle
3 Quick-release lock
4 Safety-Start-trigger (SST) 1

See *Chapter 10 'Tightening' on page 62* and *Chapter 11 'Loosening' on page 65* for a description of the tightening and loosening procedures using DA2*safety*. However, both of the Safety-Start-triggers (Fig. 25/1 and 4) will always need to be pressed at the same time instead of only one trigger.

Fig. 25: Safety-Start-triggers (SST)

Carry handle



1. To adjust the carry handle (Fig. 25/2), open the quick-release lock (Fig. 26/1).
2. Turn the carry handle to the desired position.
3. Fasten the quick-release lock (Fig. 25/3).

Fig. 26: Quick-release lock

10 Tightening

Danger of crushing

WARNING!

Danger of crushing between the reaction arm and bracing surface!

Body parts could get between the reaction arm and bracing surface. This could result in serious injuries.

– Never put body parts between the reaction arm and bracing surface.
– Carefully attach the impact wrench socket.

Overloading and breakage

WARNING!

Danger of injury due to overloading and breakage!

Overloading of the nutrunner or individual components can result in serious injuries.

– Do not use the nutrunner if the fastening operation is not entirely clear.
– Note the torque chart.
– Check the reaction arm for visible damage prior to use. Do not use the reaction arm if it is damaged.
– Brace the reaction arm correctly ↳ *Chapter 8 ‘Bracing the reaction arm’ on page 59*.

Starting the fastening operation

Contact PLARAD® service prior to operation at temperatures below 0°C.

1. Ensure that the nutrunner has been properly prepared (↳ *Chapter 5 ‘Preparing the nutrunner’ on page 52*) and that the fastening operation is known ↳ *Chapter 4 ‘Determining the bolting process’ on page 51*.
2. Ensure that the battery is charged and correctly connected to the nutrunner ↳ *Chapter 6 ‘Supplying with energy’ on page 54*.
3. Ensure that the torque level setting has been made ↳ *Chapter 7 ‘Setting the torque levels’ on page 58*.
4. Attach the nutrunner to the bolted connection in such a way that the full height of the bolt head or nut is gripped by the impact wrench socket.

   If this is not possible, use an impact wrench socket and accessories that match the fastening operation.

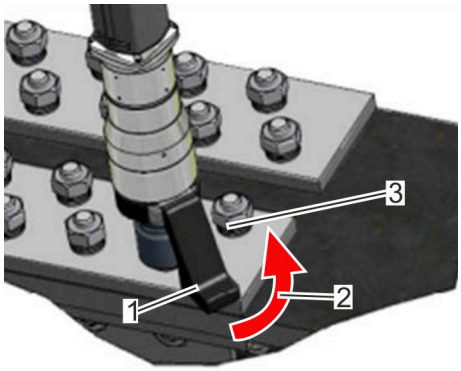

Fig. 27: Starting rotation angle

1 Reaction arm
2 Starting rotation angle
3 Bracing

5. Ensure that the reaction arm (Fig. 27/1) is braced against a bracing surface (Fig. 27/3) on its side facing the nutrunner's desired direction of rotation. Ensure that there is full contact. Note the starting angle of rotation (Fig. 27/2).

6. Do not retighten. Do not repeat correctly completed fastening operations.

Direction of rotation

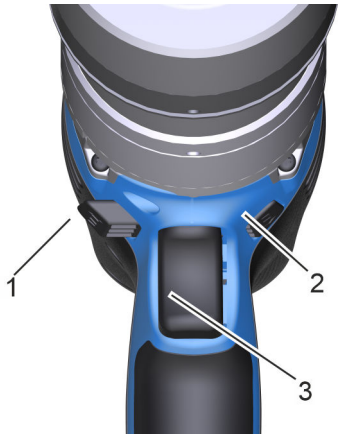

Fig. 28: Direction of rotation

1 Tightening in clockwise direction
2 Loosening in anti-clockwise direction
3 Trigger

7.

Standard direction of rotation: Right-hand thread

	Direction of rotation setting	Direction of rotation
	Right-hand side is pressed.	Clockwise (CW) Tightening in clockwise direction
	Middle position	No rotation possible. Transport position
	Left-hand side is pressed.	Anti-clockwise (CCW) Loosening in anti-clockwise direction

To tighten in clockwise direction (CW), push the direction of rotation setting (Fig. 28/1) to the right.

To loosen in anti-clockwise direction (CCW), push the direction of rotation setting (Fig. 28/2) to the left.

⇨ An acoustic signal sounds if torque levels are blocked.

Trigger

8. **NOTICE!**
Property damage due to pulsing!

Press and hold the trigger (Fig. 28/3) until the fastening operation has concluded and an acoustic signal sounds. Do not pulse (press and release the trigger in quick succession).

⇨ If the fastening operation was successful, a longer one-off acoustic signal sounds and the next fastening operation can be started.

If the fastening operation was not successful, two brief acoustic signals sound. The set torque was not reached.

If no acoustic signal sounds, the bolted connection was not correct.

9. If the fastening operation does not start, ensure that the selected torque level is not blocked ↳ *Chapter 13 'Using the Diagnostic Setting Software DSS' on page 84*.

Checking the result

10. Check the torque with a suitable torque gauge to verify that the fastening operation was successful.

During the fastening operation

During the fastening operation, the handle of the nutrunner can be turned to ensure that ergonomic use is possible. The automatic safety swivel joint between the drive motor and gearbox locks at a torque in excess of 2 Nm. Reaction forces acting on the user's hand are prevented.

If the nutrunner is switched off, the handle can be turned freely once more.

The automatic release mode makes it easier to continue working after finishing a bolted connection. The torque resulting from the bracing within the nutrunner is reduced to move the reaction arm away from the bracing surface. The nutrunner can be easily removed from the bolted connection.

11 Loosening

Danger of crushing

WARNING!

Danger of crushing between the reaction arm and bracing surface!

Body parts could get between the reaction arm and bracing surface and result in serious injuries.

– Never put body parts between the reaction arm and bracing surface.
– Carefully attach the impact wrench socket.

Overloading

NOTICE!

Property damage due to overloading!

Significant torques are exerted on the components during loosening. This can cause breakages.

– Do not overload components.

Starting the loosening process

Contact PLARAD® service prior to operation at temperatures below 0°C.

1. Ensure that the nutrunner has been properly prepared (↯ *Chapter 5 ‘Preparing the nutrunner’ on page 52*) and that the fastening operation is known ↯ *Chapter 4 ‘Determining the bolting process’ on page 51*.
2. Ensure that the battery is charged and correctly connected to the nutrunner ↯ *Chapter 6 ‘Supplying with energy’ on page 54*.
3. Ensure that the torque level setting has been made ↯ *Chapter 7 ‘Setting the torque levels’ on page 58*.
4. Attach the nutrunner to the bolted connection in such a way that the full height of the bolt head or nut is gripped by the impact wrench socket.

   If this is not possible, use an impact wrench socket and accessories that match the fastening operation.
5. Ensure that the reaction arm is braced against a bracing surface on its side facing the nutrunner’s desired direction of rotation. Ensure that there is full contact.

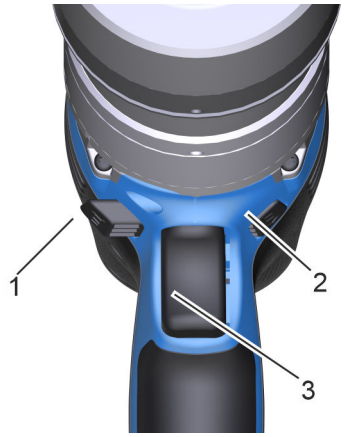

Fig. 29: Direction of rotation

1 Tightening in clockwise direction
2 Loosening in anti-clockwise direction
3 Trigger

6.

Standard direction of rotation: Right-hand thread

To tighten in anti-clockwise direction (CCW), push the direction of rotation lever (Fig. 29/2) to the left.

⇨ An acoustic signal sounds if torque levels are blocked.



7.

NOTICE!
Property damage due to overloading!

In order to loosen bolted connections, it is often the case that greater torques are needed than those required for bolting. To set the maximum torque, set the setting level to the breakaway torque level  ↳ *Chapter 7 'Setting the torque levels' on page 58*. Ensure that all components are designed for this load.

Do not use the breakaway torque level for bolting.

In delivery state, the breakaway torque level is blocked when tightening in clockwise direction (CW).

Trigger

8.

NOTICE!
Property damage due to pulsing!

Press and hold the trigger (Fig. 29/3) until the loosing process has been completed. Do not pulse (press and release the trigger in quick succession).

⇨ If loosening was successful, the next fastening operation can be started.

9. If the fastening operation does not start, ensure that the selected torque level is not blocked ↳ *Chapter 13 'Using the Diagnostic Setting Software DSS' on page 84*.

12 Transferring data

Software

You can retrieve operating data and events from the DA2*docu* and DA2*safety* nutrunners and send these data to a terminal device through data transfer. To do so use:

- Windows®-PLARAD-DA2 software
- PLARAD-DA2 app (Android)

The Windows®-PLARAD-DA2 software is included as standard with the nutrunners DA2*docu* and DA2*safety*, is stored on the included USB stick, has been sent as an email attachment or is available for download.

Data transfer

The nutrunners DA2*docu* and DA2*safety* are capable of producing their own WiFi network for connecting a suitable terminal device. Using the PLARAD-DA2 software or PLARAD-DA2 apps, the connected terminal device can retrieve documentation and adjust settings on the nutrunner.

GPS

The nutrunners DA2*docu* and DA2*safety* incorporate GPS modules. This module generates data for the individual bolted connections.

The GPS module stores the location of the nutrunner. You can disable coordinate saving to prevent creation of a movement profile.

Sleep mode

An activated documentation module requires energy. If GPS is set permanently, the battery discharges quickly.

In order to save energy, the GPS connection is disconnected automatically after a set inactivity period and the nutrunner switches to sleep mode. The sleep mode is also activated after attaching and changing the battery.

You can adjust the sleep mode timer settings in the *'Device Settings' – 'Sleep Time'* menu ↬ *Chapter 12.5.3 'Device settings' on page 76*.

In order to switch from sleep mode to normal work mode, press and hold the trigger for 2 seconds.

On the DA2*safety*, this only requires pressing the bottom trigger.

After the set inactivity period, the nutrunner switches back to sleep mode automatically.

12.1 Installing the Windows®-PLARAD-DA2 software

Personnel: ■ Qualified nutrunner personnel

Prerequisites:

- Terminal device with Windows® operating system.
- Read, modify and write permissions for the folder in the file system.

1. Connect the USB stick to the terminal device or unzip the software package.
2. Copy the DA2 software elements to a folder in the computer's file system.
3. Refer to the *'READ ME'* file for assistance.
4. Start the application (.exe file).

   ⇨ A log folder is created automatically.

   The terminal device is ready.

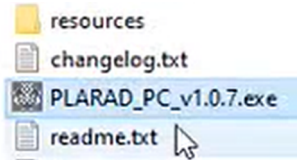

Fig. 30: Software

12.2 Installing the PLARAD-DA2 app

The PLARAD-DA2 app lets you set up fastening operations quickly and transfer them to a nutrunner.

For Android

1. For Android terminal devices, download the PLARAD-DA2 app from the Google Play Store.
2. Install the PLARAD-DA2 app. For questions on how to install apps, refer to the operating instructions for the terminal device.

   ⇨ The terminal device is ready.

12.3 Connecting

The app and the Windows® software have the same features and a similar user interface. The descriptions below use the displays as seen in the Windows® version.

Starting WiFi hotspot

1. Switch on the nutrunner, press trigger to do so. On DA2*safety*, press the bottom trigger.

   ⇨ The nutrunner boots a WiFi hotspot.

   WiFi network name: PLARAD_DA2 Blueline_xxx

   (xxx = nutrunner's number)

The nutrunner's number (device ID) is shown on the sticker below the logo.

2. Start the PLARAD-DA2 software.

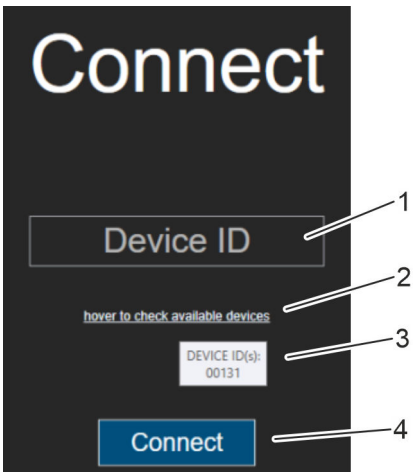

Fig. 31: Connecting the software

3. Connect the software.

   To see the *'device ID'* number, move the mouse cursor over help display (Fig. 31/2).

   ⇨ All nutrunners available for connection to the software are shown (Fig. 31/3).

4. Enter the nutrunner's *'device ID'* number (Fig. 31/1) and press *'Connect'* (Fig. 31/4).

   ⇨ The PLARAD-DA2 software start screen appears.

Start screen

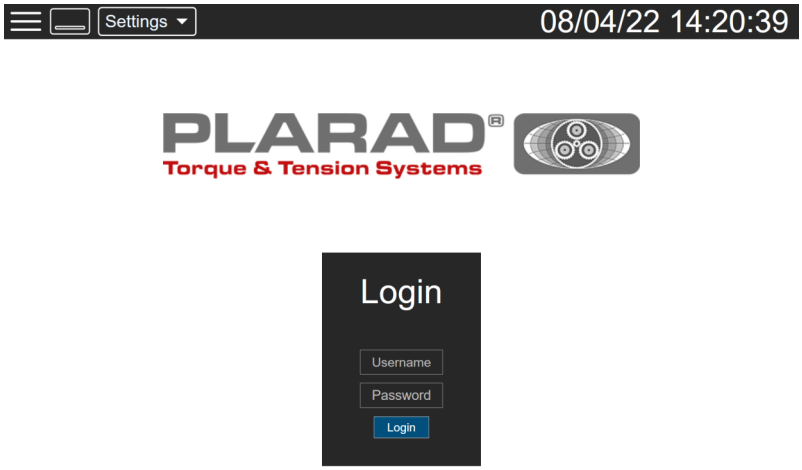

Fig. 32: Start screen

Logging in users

User Manager, see ↳ *Chapter 12.5.5 'User Manager' on page 78*.

To log a user in to the software, enter the *'user name'* and *'password'* and then press *'Login'*.

> *Default user: admin*
>
> *Password: plarad*

⇨ If the software recognises the user name and the password matches, the home screen (↳ *Chapter 12.4 'Home screen structure' on page 70*) comes up.

12.4 Home screen structure

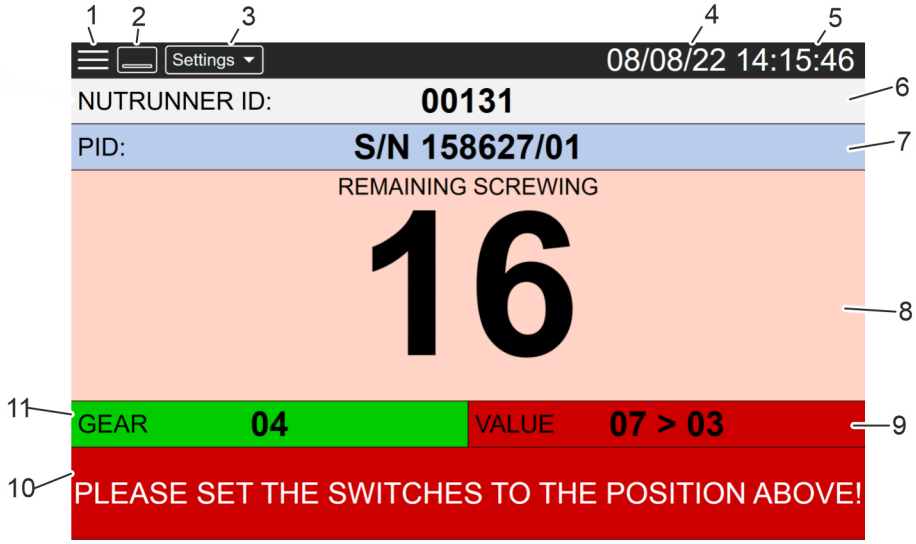

Fig. 33: DA2 software home screen

Number	Display element
1	Menu ↳ *Chapter 12.5 'Getting to know the menu' on page 71*
2	Show/hide window ↳ *Chapter 12.6 'Minimising the Windows® window' on page 83*
3	Settings ↳ *Chapter 12.7 'Modifying settings' on page 83*
4	Date (nutrunner) ↳ *Chapter 12.9 'Date' on page 83* Set date ↳ *Chapter 12.5.6 'Documentation' on page 80*
5	Time (nutrunner) ↳ *Chapter 12.8 'Clock' on page 83* Set clock ↳ *Chapter 12.5.6 'Documentation' on page 80*
6	Device ID of connected nutrunner (hard-coded by PLARAD) To view another nutrunner: ■ Press *'Disconnect'* ↳ *Chapter 12.5.7 'Disconnecting' on page 82.* ■ Connect the new nutrunner ↳ *Chapter 12.3 'Connecting' on page 68.*
7	Product ID: freely editable name for the bolted connection

Number	Display element
8	Status display *‘Example home screen after sending’ on page 76* FREERUN: unlocked Number of bolting jobs to be executed ■ Background red: Error, bolted connection not OK ■ Background green: Bolted connection OK ■ Background yellow: Unfasten bolted connection
9	Setting level *‘Gear setting and setting levels’ on page 15* Example: 7 (current value) > 3 (target value)
10	Information, error messages
11	Gear *‘Gear setting and setting levels’ on page 15*

12.5 Getting to know the menu



→ To call up the menu, press ☰.
⇨ The menu items are displayed.

Menu item	Description
Create Job Create Job	*Chapter 12.5.1 ‘Creating a new job’ on page 73* ■ New job ■ Delete job ■ Import job ■ Export job
Send Job Send Job	*Chapter 12.5.2 ‘Sending a job’ on page 75* ■ Choose job from job list. ■ Enter product ID. ■ Send job ■ Display on home screen: – green: correct setting – red: incorrect setting ■ Number of bolts is shown. ■ Repeat job Keep on executing the same job for the indicated number of times.

Menu item	Description
Device Settings Device Settings	*Chapter 12.5.3 'Device settings' on page 76* ■ User/Station ID: server ID ■ Sleep Time: Battery saver. Inserting battery and pressing trigger switches on the nutrunner. If it is not used for the indicated period of time (trigger not pressed), the nutrunner switches off. ■ WiFi Channel: WiFi frequency bandwidth. Look for a channel with low data traffic. ■ Lock Function: There needs to be a loaded job for the nutrunner to start. ■ Screw Loosening: Loosen/do not loosen bolts. ■ Screw Direction: Thread direction right-handed/left-handed: ON CW, Off CCW ■ WiFi Status: Enable/disable WiFi. When connecting a battery, WiFi automatically switches to enabled. ■ Safety Trigger: Setting for PLARAD use only. DA2*safety* enabled. ■ GPS Logging: Enable/disable GPS location logging. ■ Document Logging: Enable/disable documentation logging. ■ Count OK: Correct bolting connections are counted. ■ Count NG (not good): Incorrect bolting connections are counted. ■ Count Rev.: Loosening operations are counted. ■ Count Reset: Reset counter to 0 when documentation is deleted.
Device Info Device Info	*Chapter 12.5.4 'Device info' on page 78* ■ Type name ■ HW version ■ PCB version ■ MAC address ■ Documentation: activated DA2*docu*
User Manager User Manager	*Chapter 12.5.5 'User Manager' on page 78* ■ User List: list of users registered in the software ■ Create: register a new user. Specify user name, password and level. ■ Roles for access rights: – Level 1: Users – Level 2: Specialist personnel – Admin

Menu item	Description
Documentation	*Chapter 12.5.6 'Documentation' on page 80*
Documentation	■ Load data ■ Synchronise date and clock ■ Delete entries ■ Switch unit display: Nm – ft-lb ■ Number of stored bolting jobs is shown ■ Data display ■ Export to Excel ■ Export to pdf
Disconnect	*Chapter 12.5.7 'Disconnecting' on page 82*
Disconnect	Disconnect software from nutrunner.
Log Out	*Chapter 12.5.8 'Logging out' on page 82*
Log Out	Log out user from software.
Exit	*Chapter 12.5.9 'Exiting' on page 82*
Exit	Close the PLARAD-DA2 software.

12.5.1 Creating a new job

'Menu' → *'Create job'*

A *'Job'* can be used to bundle multiple bolting operations and their parameters.

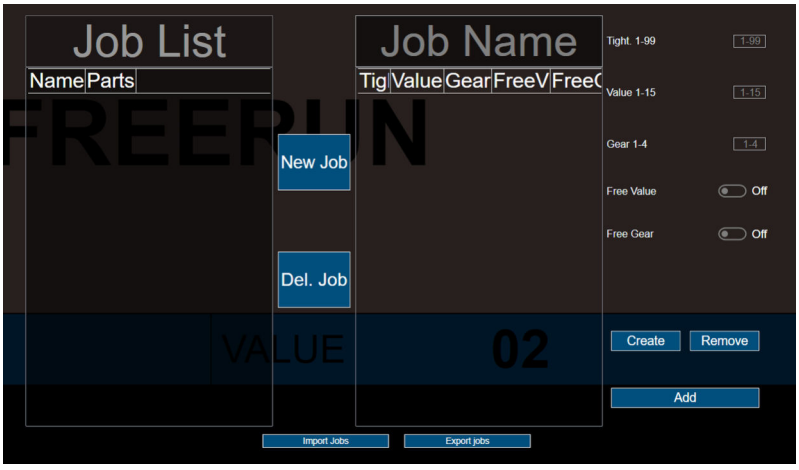

Fig. 34: Create Job

Job List

The *'Job List'* shows all saved jobs.

Creating a job

New Job

1. To create a new bundle of bolting operations, press *'New Job'*.
2. *'Job Name'* – enter a unique name.
3. *'Tight. 1 - 99'* – specify the number of bolting operations for execution with identical settings.
4. Refer to the torque chart to find the gear and setting level values required for the respective torque.
5. *'Value 1 - 15'* – specify the nutrunner's setting level.
6. *'Gear 1 – 4'* – specify the nutrunner's gear.
7. *'Free Value' 'On – Off'* – specify whether to lock (Off) or unlock (On) setting level adjustment.

   When set to *'Off'*, you can run the nutrunner at the specified setting level only.
8. *'Free Gear' 'On – Off'* – specify whether changing gears is locked (Off) or enabled (On).

   When set to *'Off'*, you can run the nutrunner in the specified gear only.

Remove

9. To remove any already existing program blocks, press *'Remove'*.

Create

10. To save the input data as a block under the given *'Job Name'*, press *'Create'*.
    ⇨ The data are shown in the list below *'Job Name'*.
11. If desired, create additional blocks. To do so, enter the data and create the block using *'Create'*.

Add

12. When you have saved all bolting operations, add *'Job Name'* to the *'Job List'*. Press *'Add'* to do so.
    ⇨ You can select the bolting operations bundle (job) under *'Job Name'*.

Del. Job

Del. Job

To delete a job from the *'Job List'*, select the job and press *'Del. Job'*.

Importing jobs

Import Jobs

1. To import a job, press *'Import Jobs'*.
   ⇨ The choose file window opens.
2. Select the directory and import the file.
   ⇨ You can select the imported bolting operations bundle (job) under *'Job List'*.

Exporting jobs

Export Jobs

1. To export a job from the *'Job List'*, select the job and press *'Export Jobs'*.
   ⇨ The choose file window opens.
2. Select the directory and export the file.
   ⇨ The bolting operations bundle (job) is saved to the specified directory.

12.5.2 Sending a job

'Menu' ➔ *'Send job'*

The fastening operations bundles (jobs) created can be transmitted to the nutrunner.

1. Navigate to the *'Send Job'* menu.

Send

2. Choose a job from the *'Job List'*.
3. *'PID'* – Product ID: Assign a unique name.
4. *'Repeat Job'* – if you want the job to be executed multiple times, slide the slider to *'On'* and enter the number of repetitions.
5. Press *'Send'*.
   ⇨ The job is saved to the nutrunner.

   The home screen is displayed.

Example home screen after sending

After sending, the menu screen closes and the home screen is displayed.

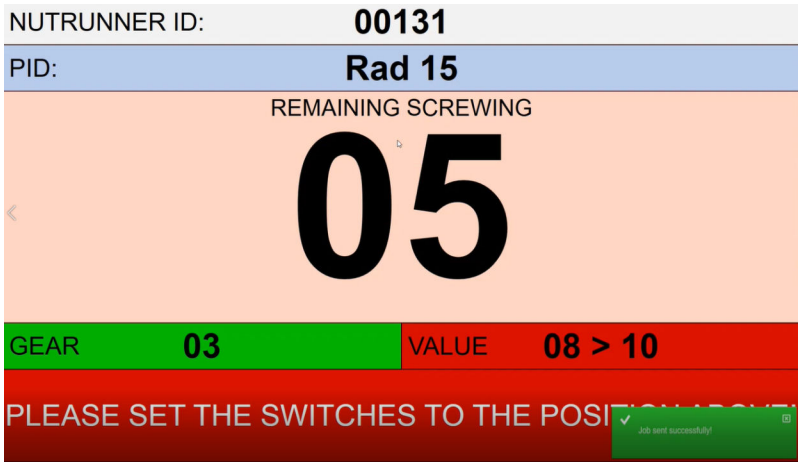

Fig. 35: Example home screen

Fig. 35 shows the data sent:

- Nutrunner number 00131 is connected.
- The job named ‘Rad 15’ (product ID) has been loaded.
- The status field indicates the number of bolting operations still remaining.
  The background turns green when a bolted connection has been finished and is *‘OK’*. The number reduces by 1.
  The background turns red when a bolted connection has been finished and is *‘NOK’*.
- Gear 3 has been set correctly.
- The setting level that has been set (08) does not match the setting level specified for the job (10). The background is red.
  Adjusting the setting level to the correct value will turn the background green.
- A notification with a red background indicates the incorrect setting level value.
- A green message appears briefly to indicate that the data have been sent successfully.

12.5.3 Device settings

‘Menu’ → *‘Device settings’*

Setting	Meaning
User/Station ID	A server ID can be entered for future applications.
Sleep Time	When a battery is inserted and the trigger is pressed, the nutrunner switches on. To preserve the battery, you can set a *'sleep time'*. If the nutrunner is not used for the indicated period of time, i.e. the trigger is not pressed, the nutrunner switches off. Enter the number of minutes.
WiFi Channel	The WiFi frequency bandwidth is divided into 14 channels. Specifying a channel allows you to choose a frequency bandwidth with the lowest-possible data traffic.
Lock Function	On – there needs to be a loaded job for the nutrunner to start. Off – free run: the nutrunner can be used freely without a job.
Screw Loosening	Enable/disable the capacity to loosen a bolted connection.
Screw Direction	You can set the screw direction for right- and left-hand fastening threads: **Off – CCW** Tightening direction anti-clockwise Loosening direction clockwise **On – CW** Tightening direction clockwise Loosening direction anti-clockwise
WiFi Status	Enable/disable WiFi. Connecting the battery automatically switches on WiFi.
safety Safety Trigger	Setting for PLARAD use only. DA2*safety* enabled.
GPS Logging	Enable/disable GPS location tracking.
Document Logging	Enable/disable documentation.
Count OK	The counter counts correct bolting operations (OK).
Count NG: not good	The counter counts incorrect bolting operations (NOK).
Count Rev	The counter counts loosening operations.
Count Reset: Counter to 0	Resets all counters to 0 when deleting documentation.

Apply

1. Press *'Apply'* to adopt changed settings.

Reset

2. Press *'Reset'* to reset changed settings.

12.5.4 Device info

'Menu' → *'Device info'*

Information specific to the nutrunner is displayed:

- Type name
  Nutrunner type
- HW version
  Nutrunner hardware version
- PCB version
  Version of the printed circuit board
- MAC address
  Network adapter's hardware address
- Documentation: activated
  DA2*docu*

12.5.5 User Manager

User Manager

'Menu' → *'User Manager'*

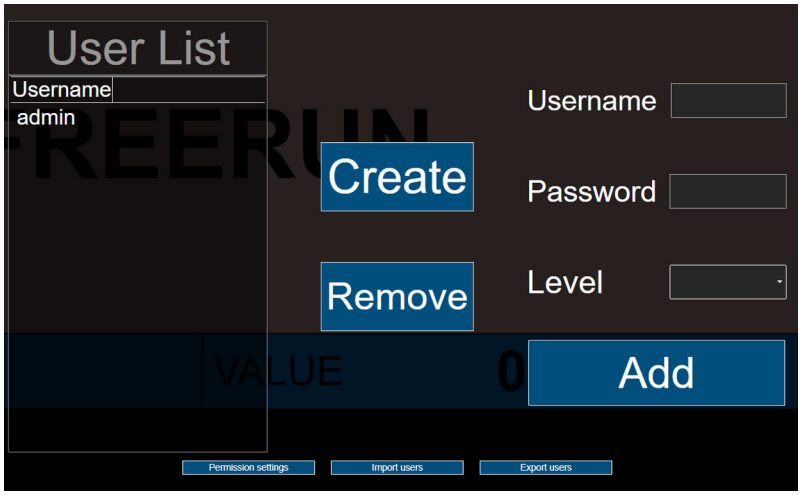

Fig. 36: User Manager

The User Manager is where you set up individual users including their user names, passwords and access rights.

User List

The *'User List'* shows the users created along with their user names.

Assigning access rights

Prerequisite: The currently user is logged in as the 'admin' role.



1. To create roles for access rights, press *'Permission settings'*.
2. In the *'Permission settings'* window, choose the desired role (level 1, level 2, admin).

3. Set up the access rights for the chosen role by selecting or deselecting the various menu items.

Save

4. Press *'Save'* to save your settings.

⇨ Separate access rights are specified for each role.

Typical roles would look like this:

- Level 1: Users
- Level 2: Specialist personnel
- Admin

Registering a new user

Prerequisite: The currently user is logged in as the 'admin' role.

1. To register a new user, enter *'Username'* and *'Password'*.
2. Choose access rights (*'Level'*).

You can choose from the following:

- level 1
- level 2
- admin

Create

3. Press *'Create'* to save your settings.

⇨ The new user is shown in the *'User List'* and can now log in.

Deleting users

Remove

There must always be a user with 'admin' access rights.

To delete a user from the *'User List'*, choose the user and press *'Remove'*.

⇨ This user will no longer be able to log in.

Access rights

You can import and export access rights.

Import

Import users

1. To import access rights, press *'Import users'*.

⇨ The choose file window opens.

2. Select the directory and import the file.

⇨ The imported user can log in.

Export



1. To export access rights from the *'User List'*, choose a user and press *'Export users'*.
   ⇨ The choose file window opens.
2. Select the directory and export the file.
   ⇨ The export file is saved to the specified directory.

12.5.6 Documentation

Prerequisite



You can only use the *'Documentation'* menu item if DA2*docu* is active ↳ *Chapter 12.5.4 'Device info' on page 78*.

DA2safety comes with activated documentation feature.

To enable documentation on the DA2power, contact PLARAD® Service.

Activating

'Menu' → *'Documentation'* → *'Activator'*

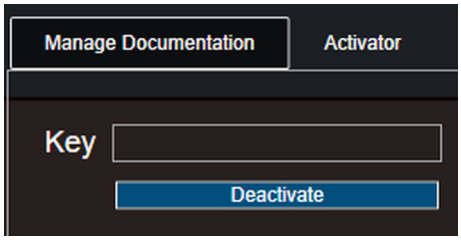

Fig. 37: Activating documentation

1. If the nutrunner has not been activated in the software yet, enter the key and press *'Activate'*.
   ⇨ You can load the nutrunner's documentation ↳ *'Managing documentation' on page 80*.
2. When the nutrunner has been activated, you can deactivate it. To do so, enter the key and press *'Deactivate'*.

Managing documentation

'Menu' → *'Documentation'* → *'Manage Documentation'*

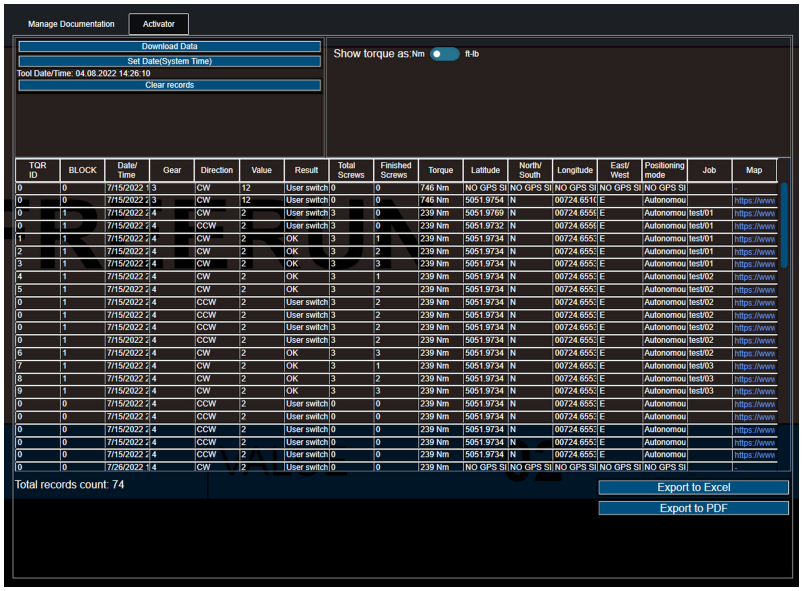

Fig. 38: Managing documentation

Prerequisite: The nutrunner has been activated *'Activating' on page 80*.

Set Date (System Time)

1. To synchronise clock and date of the terminal device and nutrunner, press *'Set Date (System Time)'*.

⇨ The nutrunner's current clock time is shown.

If the terminal device's and nutrunner's clocks are not synced, you will see a warning message when downloading the data.

2. Use the slider to set the torque values to display in *'Nm'* or *'ft-lb'*.

Download Data

3. To download nutrunner data, press *'Download Data'*.

⇨ The data saved in the nutrunner (*'Data recorded' on page 81*) are listed.

The number of entries is shown below the list.

Export to Excel

4. To save the nutrunner documentation to csv file, press *'Export to Excel'*, enter the desired directory and save.

Export to PDF

5. To save the nutrunner documentation to PDF file, press *'Export to PDF'*, enter the desired directory and save.

Clear records

6. To delete the nutrunner documentation, press *'Clear records'*.

⇨ The nutrunner's data memory is erased.

Data recorded

The nutrunner records the following data:

- TQR ID
  (Bolting operation) counter
  Settings (COUNT OK, NG, Rev)
  Chapter 12.5.3 'Device settings' on page 76
- Block
  Shows the current program block.
- Gear
- Direction of rotation
- Setting level
- Result
  – Bolted connection OK
  – Error number
- Number of bolting operations in job
- Completed bolted connections
- Torque
- GPS data
- Job name
- Reference to GPS data in Google Maps

12.5.7 Disconnecting

'Menu' ➔ *'Disconnect'*

To remove a connected nutrunner from the PLARAD-DA2 software, press *'Disconnect'*.

⇨ The software will keep running.

You can connect another nutrunner.

12.5.8 Logging out

'Menu' ➔ *'Log Out'*

To log out a user from the PLARAD-DA2 software, press *'Log Out'*.

⇨ The software will keep running.

Another user can log in.

12.5.9 Exiting

'Menu' ➔ *'Exit'*

To close the PLARAD-DA2 software, press *'Exit'*.

12.6 Minimising the Windows® window



1. To minimise the PLARAD-DA2 software's Windows® window, press .
   ⇨ The windows is hidden.
2. To maximise the PLARAD-DA2 software's Windows® window once more, press the program icon in the task bar.

12.7 Modifying settings



→ To change the settings for the menu language and the values for the reset timer, press 
.

Language settings

You can change the menu language.

This does not change the home screen's language.

Adjusting the reset timer

The reset timer lets you specify how frequently the nutrunner's displayed data are refreshed and how often the connection to the nutrunner is checked.



The shorter the set period, the greater the consumed current (battery power).

12.8 Clock

The nutrunner's internal clock time is shown.

→ If the nutrunner's and terminal device's clocks are out of sync, synchronise the clocks ↳ *Chapter 12.5.6 'Documentation' on page 80*.

12.9 Date

The nutrunner's internal date is shown.

→ If the nutrunner's and terminal device's dates are out of sync, synchronise the date ↳ *Chapter 12.5.6 'Documentation' on page 80*.

13 Using the Diagnostic Setting Software DSS

Functions

The “Diagnostic Setting Software” (DSS) can be used as an option. Functions:

- Read out data from the nutrunner.
- Block individual torque levels.
- Update the firmware.
- Save the status report as a PDF file.

Different functional scope

The functional scope is dependent on the nutrunner.

- Nutrunner without direction of rotation recognition
  Step blocking effects all gears in CW and CCW.
- Nutrunner with direction of rotation recognition
  Step blocking effects all gears. Step blocking in CW and CCW may vary.
- Nutrunner with direction of rotation and gear recognition
  Step blocking can be specified individually for each gear and each direction of rotation.

The different levels are displayed under *‘Information’* in the *‘Customizing’* menu (↳ *Chapter 13.3 ‘Customizing’ on page 88*).

Scope of delivery



Fig. 39: Programming adapter

The scope of delivery for the Diagnostic Setting Software DSS includes:

- Programming adapter
- USB connection cable
- USB stick with Diagnostic Setting Software DSS and FTDI drivers

System requirements

In order to use the Diagnostic Setting Software DSS, the following system requirements must be met:

- Terminal device with Windows® operating system.
  Windows® XP, Windows® 7, Windows® 8, Windows® 10
- Installed FTDI® VCP driver (Virtual COM port)
  ↳ www.ftdichip.com/Drivers/VCP.htm
- Installed Microsoft .NET Framework 4 Version (or newer)
  ↳ Microsoft Download Center
- USB interface (USB 2.0 or newer)
- Administrator rights (for installation only)

13.1 Connecting to the DSS

Installing the DSS

The *'Diagnostic Setting Software'* programme must be installed on a Windows®-compatible terminal device.

1. Ensure that the system requirements are met *'System requirements' on page 84*.

2. Start the *'Diagnostic Setting Software Installer.exe'* programme.

3. Select the optional components to install and confirm with Next >.
   - Diagnostic Setting Software
   - Desktop Shortcut
   - Start Menu Shortcuts
   - FTDI Driver for USB connection

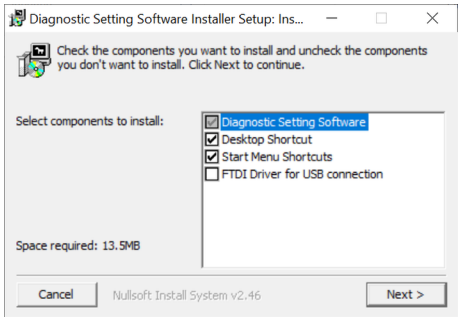

Fig. 40: DSS installation

4. Select destination folder for installation.

5. Press Install.

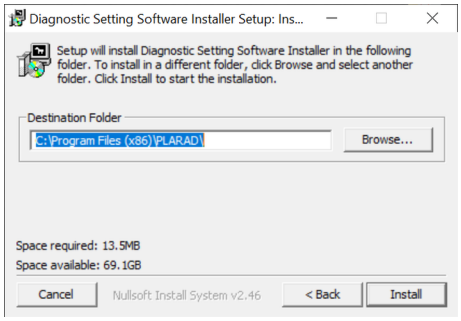

Fig. 41: DSS installation

6. Wait until installation has concluded. Press Close.
   ⇨ The programme and the additionally selected components are installed. The programme is ready for operation thereafter.

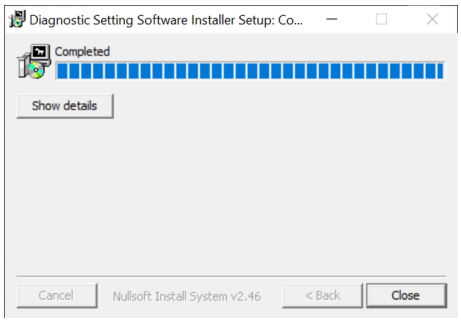

Fig. 42: DSS installation

Connecting the programming adapter

The FTDI® VCP driver must be installed in order to connect the USB programming adapter *'Installing the DSS' on page 85*.

1. Connect the programming adapter to the terminal device using a USB cable.

   ⇨ An LED on the charge status indicator lights up green.

Starting the DSS

2. Start *'Diagnostic Setting Software.exe'*.

Connecting the nutrunner

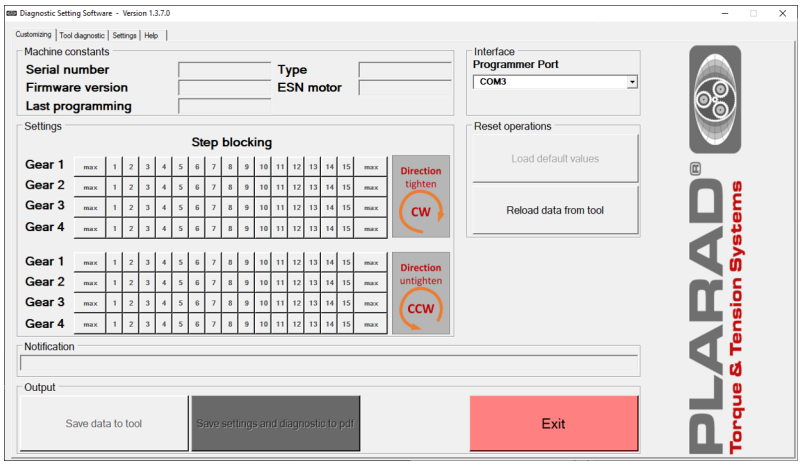

Fig. 43: Start display

3. Connect the nutrunner to the programming adapter. To this end, slide the programming adapter onto the nutrunner instead of the battery.

   ⇨ The “Interface” list and all controls required for communication with the battery nutrunner are activated.

   All controls that require a machine connection are deactivated (grey).

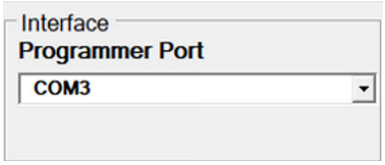

4. Select the interface to which the USB programming adapter is connected.

> *If the automatic COM selection is not working, select the correct COM Port manually.*



5. Press Reload data from tool.
6. Press and hold the trigger until the *'Now Connected'* message is displayed.

   ⇨ The nutrunner is connected to the terminal device via the programming adapter.

Transferring nutrunner data



7. Press Reload data from tool.

   Press and hold the trigger until the *'Info: Communication successful. Settings could be changed'* message is displayed.

   ⇨ All available nutrunner data is loaded and displayed.

13.2 Getting to know the DSS

Start display

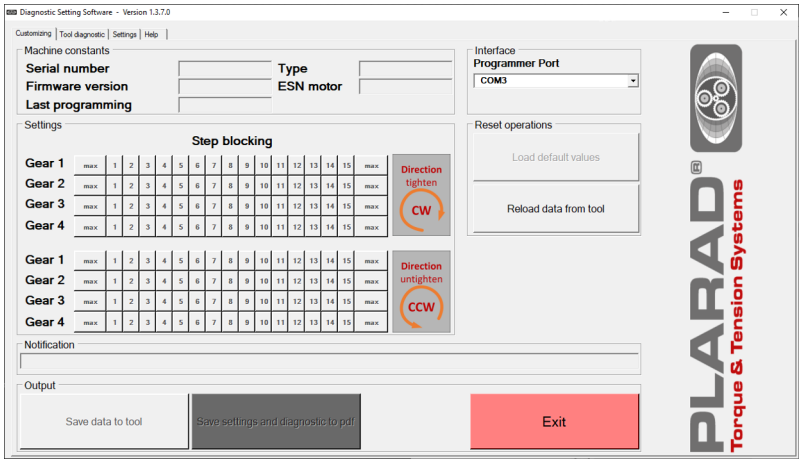

Fig. 44: Start display

DSS starts up in the *'Customizing'* menu.

Inactive features and data that has not yet loaded are greyed out.

The following is displayed:

- *'Machine constants'*
  Parameters for the nutrunner
- *'Settings'*
  Step blocking
- *'Interface'*
- *'Reset operations'*
- *'Notification'*
- *'Output'*

DSS menus

- *'Customizing'*
- *'Tool diagnostic'*
- *'Settings'*
- *'Help'*

Error messages

Error messages can be displayed in the *'Notification'* line.

↳ *Chapter 15.2 'DSS – Error messages' on page 100*

Exiting the DSS



→ To exit the DSS, press Exit.

13.3 Customizing

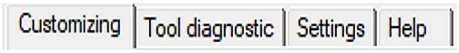

→ Call up the *'Customizing'* menu.

Retrieving nutrunner data

Prerequisite:

Nutrunner is connected to DSS ↬ *Chapter 13.1 'Connecting to the DSS' on page 85*.



→ Press Reload data from tool.

Press and hold the trigger until the *'Info: Communication successful. Settings could be changed.'* message is displayed.

⇨ All available machine data for the nutrunner is loaded and displayed:

- Serial number
- Type
- Firmware version
- ESN motor
- Last programming
- Step blocking

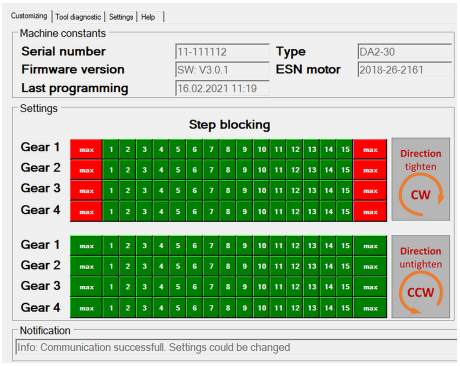

Fig. 45: Information

Blocking torque levels

Individual setting levels for the nutrunner can be blocked. This means it is no longer possible to use the blocked torque levels.

The breakaway torque level is blocked in "Direction tighten" (CW) as standard.

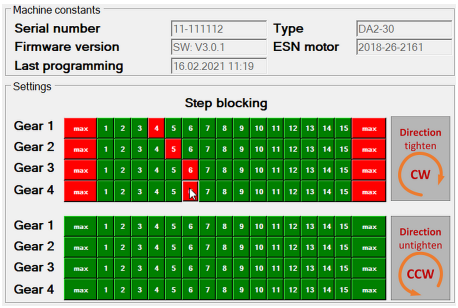

Fig. 46: Blocking torque levels

The display and setting options for step blocking is dependent on the (firmware) version of the nutrunner:

No direction of rotation recognition is possible in version 1. The blocked setting levels are blocked for both directions of rotation CW and CCW.

No gear recognition is possible in version 2. The blocked setting levels are blocked in all gears.

In version 3 (Fig. 45), each individual setting level can be blocked or enabled independently of the direction of rotation and independently of the gear setting.

1. Ensure that the nutrunner is connected to the DSS and that the nutrunner data has been retrieved.
2. Select or deselect setting levels individually. Press the corresponding number to do so.
   - ⇨ Torque levels shown in red are blocked.

     Torque levels shown in green are enabled for use.

     Save data to tool is displayed for each change.

     A message appears: *'Info: The change will not be transferred to the machine until programming.'*





3. To reset individual changes to the default values, press Load default values.
4. Press Save data to tool.
5. Press and hold the trigger until the *'Info: Programming successful.'* is displayed.
   - ⇨ The changes to the step blocking have been transferred to the nutrunner.



Saving settings and diagnostic data as a PDF

The currently displayed settings and diagnostic data can be saved as a PDF for documentation purposes and for subsequent evaluation.

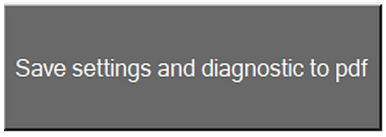

1. To generate a PDF file, press Save settings and diagnostic to pdf.

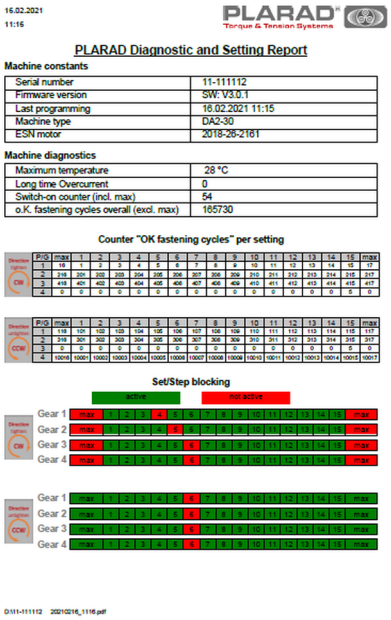

16.02.2021
11:16

PLARAD Diagnostic and Setting Report

Machine constants

Serial number	11-111112
Firmware version	SW: V3.0.1
Last programming	16.02.2021 11:15
Machine type	DA2-30
ESN motor	2018-26-2161

Machine diagnostics

Maximum temperature	28 °C
Long time Overcurrent	0
Switch-on counter (incl. max)	54
o.K. fastening cycles overall (excl. max)	165730

Counter "OK fastening cycles" per setting

Set/Step blocking

active not active

Gear 1 Gear 2 Gear 3 Gear 4

D111-111112 20210216_1116.pdf

Fig. 47: Example, PDF file

2. Specify a storage location and confirm with *'Save'*.

⇨ If saved successfully, the *'Info: Values archived successfully.'* message appears.

If not saved successfully, the *'Error 0x01: Error during archiving.'* message appears.

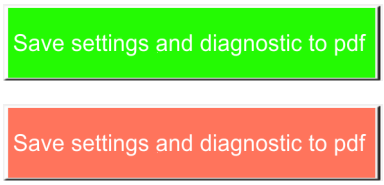

13.4 Tool diagnostic



Call up the *'Tool diagnostic'* menu.

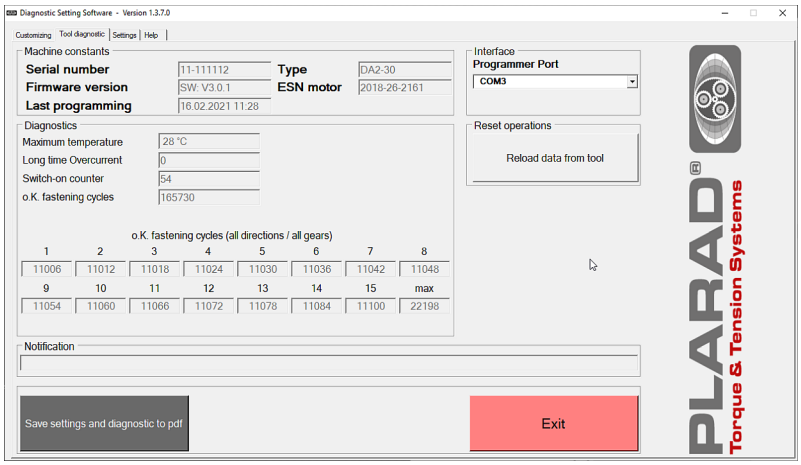

Fig. 48: Tool diagnostic

Retrieving nutrunner data

Prerequisite:

Nutrunner is connected to DSS ↳ *Chapter 13.1 'Connecting to the DSS' on page 85*.



→ Press Reload data from tool.

Press and hold the trigger until the *'Info: Communication successful. Settings could be changed.'* message is displayed.

Diagnostic data	Meaning
Maximum temperature	Maximum temperature measured at the drive motor in °C. At maximum 100°C, the integrated overheating protection switches off the drive motor.
Long time overcurrent	Number of nutrunner stops due to overheating.
Switch-on counter	Number of nutrunner starts, independently of direction of rotation, runtime and result.
OK fastening cycles overall	Total number of correctly completed bolting processes with the set torques.
OK fastening cycles per setting	Number of correctly completed bolting processes with the set torques. Each individual setting level is logged separately; gears and directions are not individually separated. Save the PDF file for a detailed listing.

Saving settings and diagnostic data as a PDF

The currently displayed settings and diagnostic data can be saved as a PDF for documentation purposes and for subsequent evaluation.



→ ↳ *'Saving settings and diagnostic data as a PDF' on page 89*.

13.5 Settings



→ Call up the *'Settings'* menu.

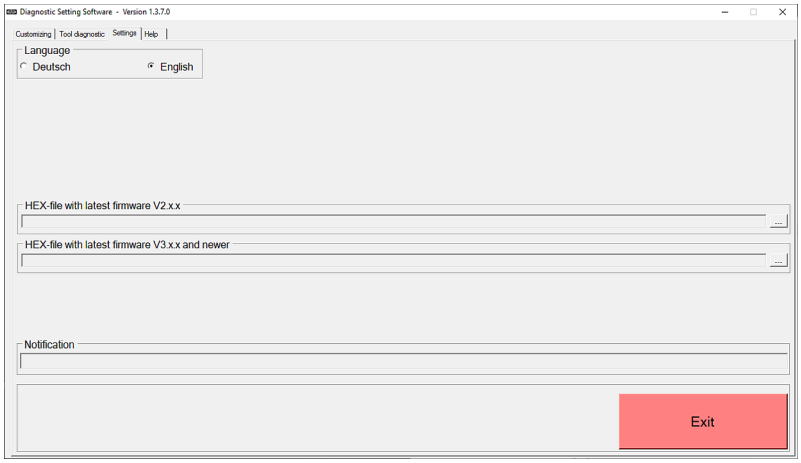

Fig. 49: Settings

Changing the language setting

The programme interface can be displayed in German and English.



→ Select the desired language.

⇨ The programme starts with the selected language interface.

The nutrunner data needs to be reloaded.

Updating the firmware

The firmware of the nutrunner can be updated using an original PLARAD® configuration file.

NOTICE!

Property damage due to incorrect configuration file!

The loading of an incorrect configuration file can cause unpredictable behaviour including the destruction of the nutrunner.

– Always contact PLARAD® service first.
– Use only the original PLARAD® configuration file provided by PLARAD® directly.

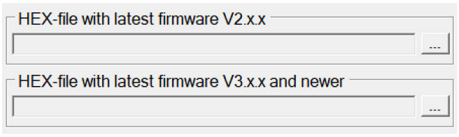

1. → Ensure that an up-to-date original PLARAD® configuration file is available.



2. To select the configuration file, press ... . Make sure it is the correct version.
3. In the subsequent selection dialogue, change to the storage location and select the correct Hex file.
4. Change to the *'Customizing'* or *'Tool diagnostic'* menu.



5. Press Reload data from tool .

   Press and hold the trigger until the firmware dialogue is displayed.

   ⇨ Information about the current version and any available newer version are displayed.

6. *The old firmware cannot be restored after an update.*

   To update the firmware, press *'Update'*.

   To abort the process, press *'Cancel'*.

   ⇨ *'Update'*: Message indicates the charge status. The information about the nutrunner is displayed once the firmware has been fully updated. All values are retained.

   'Cancel': No updates are performed.

13.6 Help

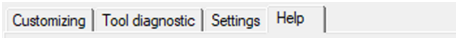

1. Call up the *'Help'* menu.

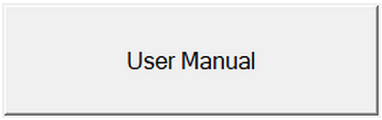

2. To view the user manual for the nutrunner, press User Manual .

   ⇨ The PDF file of the user manual opens in a PDF display programme.



3. To view information about the Diagnostic Setting Software DSS, press About PLARAD Diagnostic Setting Software .

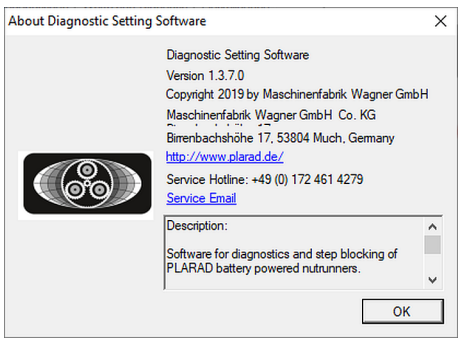

⇨ Information about the software is displayed in a dialogue window.

14 Performing maintenance

14.1 Maintenance schedule

Improperly performed maintenance tasks



WARNING!

Danger of injury from improperly performed maintenance tasks!

Improper maintenance can cause serious injuries and significant damage.

- Ensure sufficient assembly space prior to commencing the tasks.
- Ensure that the assembly site is clean and tidy. Loosely stacked or randomly scattered components and tools may cause accidents.
- With regard to maintenance tasks, only allow “Clean nutrunner” and “Have it checked for damage” to be performed by the user.
- Have all repairs performed by the manufacturer.
- Never open the nutrunner.
- Use only PLARAD® original parts.

Faultless operation

The following sections describe the maintenance tasks that are required in order to ensure optimum and faultless operation.

If routine checks reveal increased wear, shorten the requisite maintenance intervals according to the actual signs of wear. If you have questions about maintenance tasks and intervals, contact PLARAD® service.

Interval	Maintenance task	Personnel
Before and after every use	■ Clean. ■ Check surfaces, warning symbols and pictograms for damage. ■ Check the power cable, power plug and fasteners of the battery charger for damage. ■ Check the impact wrench socket and spring clip for damage and correct operation. ■ Check the reaction arm and circlip for damage and correct operation. ■ Check for leaks. *Chapter 14.2 'Having the nutrunner maintained by the user' on page 96*	User
Every 3 months ■ In the event of extreme operating conditions (e.g. dust, dirt) ■ In the event of high frequency of use, multi-shift operation ■ In the event of constant work in the upper torque range ■ In the event of soft bolting processes	■ Drive motor Perform service as stipulated by the motor manufacturer. ■ Perform the software update. ■ Planetary gearbox Perform service as stipulated by the manufacturer. Lubricate. ■ Nutrunner Exchange damaged markings. Recalibrate. Determine characteristics. Create torque chart/factory certificate. ■ Accessories Check for damage; exchange. ■ Exchange damaged markings. *Chapter 14.3 'Having service tasks performed by the manufacturer' on page 97*	PLARAD® service
Every 6 months ■ In the event of standard operating conditions ■ In the event of average frequency of use ■ In the event of work in the medium torque range		
Every 12 months ■ In the event of low frequency of use ■ In the event of work in the low torque range		

Accessories, spare parts and wear parts

Spare parts must meet the technical requirements specified by PLARAD®. This is always ensured by original spare parts. A warranty can only be provided for original spare parts supplied by PLARAD®.

The installation or use of other spare parts can, under certain circumstances, adversely alter the specified design properties and, consequently, impair active or passive safety.

Any liability and warranty for damage resulting from the use of parts other than the original spare parts and accessory parts is excluded.

Have at least the following information about the nutrunner to hand to enable quick and easy processing:

- Client
- Serial number of the nutrunner
- Desired spare part
- Desired quantity
- Desired mode of shipping

'PLARAD® service' on page 4

14.2 Having the nutrunner maintained by the user

Personnel: ■ User

Perform the following maintenance steps before and after every use:

Cleaning

1. **NOTICE!**
   Property damage due to improper cleaning!

   Clean the nutrunner with a soft cloth. Never use strong cleaning agents, water, brushes, sharp-edged tools or high-pressure cleaners.

Surfaces and markings

2. Check surfaces and markings for damage. Arrange for repairs if there is damage or illegible markings.

Battery charger

3. Check the power cable and power plug for damage and insufficient fastening. Arrange for exchange if there is damage.

Impact wrench socket

4. Check the impact wrench socket and spring clip for damage, deformation and correct operation. Arrange for exchange if there is damage.

Reaction arm

5. Check the reaction arm for damage and deformation. Check the circlip for correct operation. Arrange for exchange if there is damage.

6. **WARNING!**
   Danger of injury due to faulty nutrunner!

   Do not use a faulty nutrunner. This also applies if there are leaks. Have it repaired immediately or have the faulty parts exchanged. Contact PLARAD® service.

Transport case

7. Store the cleaned and damage-free nutrunner in the transport case until its next use.

14.3 Having service tasks performed by the manufacturer

Service intervals

The service intervals are dependent on the conditions of use and the operating site.

Service interval	Conditions
Every 3 months	■ In the event of extreme operating conditions (e.g. dust, dirt) ■ In the event of high frequency of use, multi-shift operation ■ In the event of constant work in the upper torque range ■ In the event of soft bolting processes
Every 6 months	■ In the event of standard operating conditions ■ In the event of average frequency of use ■ In the event of work in the medium torque range
Every 12 months	■ In the event of low frequency of use ■ In the event of work in the low torque range

Contacting service

WARNING!

Danger of injury and property damage due to improperly performed service tasks!

Improperly performed service tasks can cause incorrect bolted connections, destruction of the nutrunner and to injuries.

– Do not perform service tasks yourself.

→ Contact PLARAD® service in good time regarding the following service tasks.

Service tasks

Personnel: ■ PLARAD® service

Component	Service task
Drive motor	Perform service in accordance with the manufacturer's specifications.
	Perform the software update.
Planetary gearbox	Perform service as stipulated by the manufacturer.
	Lubricate.
Accessories	Check for damage; exchange.
	Exchange damaged markings.
Nutrunner	Exchange damaged markings.
	Recalibrate. Determine characteristics.
	Create torque chart/factory certificate.

Torque chart

The torques need to be checked after repairs and, in the event of deviations, a new torque chart or a new torque selection diagram needs to be created.

Newly determined values need to be stored in the nutrunner.

15 Troubleshooting

15.1 Identifying faults

Malfunctions and faults can become noticeable in different ways:

- Nutrunner is not working for no apparent reason:
  First note the list of typical errors and issues ↳ *'FAQs' on page 99*.
- Nutrunner, battery or accessory is faulty or shows signs of damage.
  Contact ↳ *'PLARAD® service' on page 4*.

FAQs

Below is a summary of typical malfunctions, issues and answers. This is intended to provide rapid assistance. For problems that cannot be solved in this way, contact ↳ *'PLARAD® service' on page 4*.

Fault symptom	Measure
The nutrunner will not start.	Check the battery charge status and charge or replace the battery in the event of insufficient charge. Is the torque level blocked? ↳ *Chapter 13 'Using the Diagnostic Setting Software DSS' on page 84*
The device gets hot too quickly.	Are the openings for the air supply dirty or clogged? Clean with a soft cloth. ↳ *Chapter 14.2 'Having the nutrunner maintained by the user' on page 96*
Battery charge status indicator is flashing red.	The battery is not operational. Bring the battery to within the operating temperature range and then charge it.
Battery charge status indicator lights up red continuously.	The battery is empty. Charge the battery.
An acoustic signal sounds.	Is the torque level blocked? ↳ *Chapter 13 'Using the Diagnostic Setting Software DSS' on page 84*
Two brief acoustic signals during use.	The bolting process was not successful. The set torque was not reached. Determine the bolting process. Repeat tightening.

15.2 DSS – Error messages

Error messages in the *'Notification'* line:

Error number	Message	Meaning
01	No connection to the tool. Press power switch	Nutrunner cannot be connected. It is potentially not connected. Check the COM-Port connection.
	The tool sends none or no correct data	The update was not completed or was not fully completed. The firmware could be damaged. Repeat the update.
	Timeout on dump	Nutrunner did not transmit the correct data. Restart the DSS.
	Timeout on dump request	Nutrunner did not transmit any data. Restart the DSS.
	Syntax within HEX-file - Firmware not changed	Internal error. The firmware has not yet changed. Repeat the update.
	Checksum transfer - Firmware not changed	Transmission error. The firmware has not yet changed. Repeat the update.
	Timeout transfer - Firmware not changed	Internal error. The firmware has not yet changed. Repeat the update.
	Syntax within HEX-file - Firmware corrupted	Internal error. The original software is potentially damaged. Repeat the update.
	Checksum transfer - Firmware corrupted	Transmission error. The original software is potentially damaged. Repeat the update.
	Checksum FRAM - Firmware corrupted	FLASH error. The original software is potentially damaged. Repeat the update.
	Timeout transfer - Firmware corrupted	Transmission error. The original software is potentially damaged. Repeat the update.
21, 22, 23	Serial Port timed out	No connection to the programming adapter. The FTDI driver is potentially not installed correctly.
31	No response from the power tool	No confirmation from the device. The original software is potentially damaged. Repeat the update.

Error number	Message	Meaning
32, 33	There are several possible messages (from the operating system)	No confirmation from the device. The original software is potentially damaged. Repeat the update.
39	No valid response	No valid confirmation from the electronic device. The original software is potentially damaged. Repeat the update.
41	Serial Port read timed out	No connection to the programming adapter. The FTDI driver is potentially not installed correctly.
42	Serial Port IO-Exception	No connection to the programming adapter. The FTDI driver is potentially not installed correctly.
43	Serial Port already open	No connection to the programming adapter. The FTDI driver is potentially not installed correctly.
44	Serial Port not open	No connection to the programming adapter. The FTDI driver is potentially not installed correctly.
51, 53	There are several possible messages (from the operating system)	The terminal device detects an error during reception of the serial data.

15.3 Performing troubleshooting

Improperly performed troubleshooting

WARNING!

Danger of injury due to improperly performed troubleshooting!

Improper troubleshooting can cause serious injuries and significant property damage.

- The user may only clean the nutrunner and check it for damage.
- Have all repairs performed by the manufacturer.
- Never open the nutrunner.
- Use only PLARAD® original parts.

Device damage

→ Contact *'PLARAD® service' on page 4* if there is any damage to the nutrunner.

Battery

→ Replace a faulty or uncharged battery. Do not put faulty batteries into service.

Reorder battery:

Contact PLARAD® service.

Returning to service after repair

WARNING!

Danger of injury due to faulty nutrunner!

If a nutrunner is not properly repaired, this can cause serious injuries.

– Never put a defective nutrunner back into service.

→ Check for correct operation prior to first-time use.

16 Disposing of the nutrunner

The nutrunner must be disposed of in an environmentally sound manner at the end of its service life.

Disassembly

WARNING!

Danger of injury due to short circuit and stored residual energy!

If components are damaged, there is a danger of injury due to short circuit or the continued presence of stored residual energy.

1. Disconnect the battery from the nutrunner.
2. Remove the impact wrench socket, reaction arm and all other optional attachment parts.
   ⇨ Reuse these components if necessary.
3. Do not dismantle the nutrunner any further.

Disposal

Insofar as no take-back or disposal agreement has been put in place, dispose of the nutrunner as electronic waste in accordance with local regulations. Use authorised collection points for the reprocessing of old electrical and electronic devices.

ENVIRONMENT!

Danger to the environment due to incorrect disposal!

Incorrect disposal can be hazardous to the environment.



Do not allow electronic components to enter bodies of water, the sewage system, the soil or household waste collection.

Have electronic waste, electronic components, lubricants and other auxiliary materials disposed of by approved specialist companies.



Do not dispose of battery cells and button cells in household waste.

Dispose of the plastic transport case and foam inlay separately from the nutrunner.

If in doubt, obtain information about environmentally sound disposal from the local municipal authority or from specialist disposal companies.

17 Technical data

Technical data sheet

Technical data sheet is available online at: https://www.plarad.de/download-center.html

Dimensions and weight

Dimensions and weight are dependent on the DA2 version. See the technical data sheet for specific values for the nutrunner.

Data	Value	Unit
Weight*	5.4 – 13.5	kg
Length	365 – 522	mm
Width	68 – 101	mm
Height	245	mm

* Specific details on the rating plate. Specifications without reaction arm but with battery.

Performance values

Data	Value	Unit
Performance range	See torque chart	
Repeatability*	≤ 4%	
Speed	0.7 – 71.6	min^{-1}

* Depending on the bolting process. Independently of the torque, the repeatability depends on the individual bolting process and must therefore be determined in the specific bolting situation.

Electrical connected loads

Data	Value	Unit
Battery charger nominal input voltage, 50 to 60 Hz	220 to 240	V
Battery charger nominal input voltage, 50 to 60 Hz	100 to 120	V
Battery charger power consumption, maximum	240	W
Battery charger charging current, maximum	8	A
Nominal battery voltage	18	V
Battery capacity	5.2 – 6	Ah
Battery	Lithium-ion	
Protective insulation	Protection class IP20	

Battery capacity

The number of possible bolted connections are values determined in trials. These values essentially depend on the bolting process (hard/soft) and on the condition of the battery. Such values may therefore vary significantly. Values based on a fully charged 6.0 Ah battery.

Type	Number of possible bolted connections	Bolting process	Torque [Nm]
DA2-05	748	M 24x95	420
DA2-10	385	M 27x95	670
DA2-20	220	M 27x95	1,400
DA2-30	110	M 36x95	2,100
DA2-36	104	M 36x95	2,300
DA2-48	88	M 52x95	3,600
DA2-80	29	M 72x300	7,900

Environment

Data	Value	Unit
Temperature range	0 to 50	°C
Temperature range for charger, battery	5 to 45	°C

Emissions

Emission levels as per EN 60745

Data	Value	Unit
Emission sound power level L_{WA}	82	dB(A)
Emission sound pressure level L_{pA}	72	dB(A)
Measurement uncertainty of emission sound pressure level	3	dB(A)
Vibration total value	< 2.5	m/s²
Measurement uncertainty for vibration total value	1.5	m/s²

WiFi

Data	Value	Unit
Frequency range	2.48	GHz
WiFi standard	IEEE802.11b /g/n	
Security standard	WPA2	
Encryption standard	AES	
Network protocol	IPv4, TCP/ http	
Communication protocol	DHCP	
Range outdoors, maximum	30	m
Range indoors, maximum	15	m
Transmission power, maximum	10	W EIRP

18 Index

A

Access rights 78
Accessories 21
Android 68
Angular gearbox 11
App 68
Apple App Store 68
Authorised partners 4
Automatic release function 20
Automatic safety swivel joint 20

B

Battery
- Capacity 105
- Care 54
- Care rules 54
- Charger 12
- Charging 56
- Connecting to the nutrunner 57
- Deep discharge 55
- Disposing 103
- Illustration 12
- LED display for battery charger 18
- Memory effect 55
- not in use for a prolonged period of time 54
- Release button 17
- Self-discharge 55
- Service life 55
- Storing 54
- Temperature range 55

Battery charge status
- LEDs on the battery 17
- Proactive display 16
- Query button on the battery 17

Bracing the reaction arm 59
Breakaway torque level 58
Brief description 12
Button cell 103

C

Case 7
CCW 77
Cleaning 96
Clock 83
Connected loads 105
Connecting 68
Controls 14
Copyright 4
Counter 77
csv file 80
Customer service 4, 48
Customizing 88
CW 77

D

DA2 app 68
DA2 software 67
DA2*safety*
- Carry handle 16
- Data transfer 67
- Functions 20
- Illustration 11
- Quick-release lock 16
- Safety-Start-trigger 18
- Tightening and loosening 61

DA2*safety* carry handle 16
Data recorded 81
Data transfer 67
- Connecting 68

Date 83
Delivery 7
- Checking 7
- Packaging material 8
- Scope 7

Determining the bolting process 51
Device ID 32
Device info 78
Device settings 76

Diagnostic Setting Software 84
Direction of rotation setting 15
Disassembly 103
Disconnect 82
Disconnecting 82
Displaying programme information 93
Displaying the user manual 93
Disposal 103
Disposing of the battery 103
Documentation 77
  Activating 80
  Deleting 80
  Exporting 80
  Managing 80
  Prerequisite 80
DSS 84
  Blocking torque levels 88
  Connecting 85
  Customizing 88
  Error messages 100
  Help 93
  Installing 85
  Retrieving nutrunner data 88
  Saving as a PDF 89
  Scope of delivery 84
  Settings 92
  Tool diagnostic 91

E

Electrical current 37
Electronic waste 103
Emissions 106
Environmental protection 50
  Electrical and electronic components 50
  Lubricants 50
  Rechargeable batteries and batteries 50
Error 99
  Performing 101
Exit 82
Exiting 82

F

FAQ 99
Faults 99
Foam inlay 7
Functions
  Loosening 65
  Overview 19
  Tightening 62

G

Gear setting 15, 58
Google Play Store 68
GPS 67, 77

H

Help 48
Home screen 70, 76

I

Illustration 10
  Battery 12
  DA2 10
  DA2*safety* 11
  with angular gearbox 11
Impact wrench sockets 41
Inlay 7
Installation 85
  App 68
  Windows® 67, 68
Intended use 32
iOS 68

J

Job
  Deleting 74
  Exporting 75
  Importing 74
  List 73
  New 73
  Sending 75

L

Lazy battery effect 55
Lock function 77
Log Out 82
Logging in users 69
Logging out 82
Loosening 65

M

Maintenance 94
  Cleaning 96
  Manufacturer 97
  Overview 94
  User 96
Maintenance schedule 94
Malfunctions
  Identifying 99
Manufacturer 4
Maschinenfabrik Wagner 4
Memory effect 55
Menu 71
Misuse 32

N

Noise emissions 106
Nutrunner
  Disposing 103
  Getting to know 10
  Maintaining 94
  Preparing 52
  Troubleshooting 99

O

Offset gear
  Bracing 24
  Brief description 22
  Cleaning 26
  Conversion of rotation angle 23
  Dismantling 24
  Grease nipple 26
  Illustration 22
  Installing 23
  Lubricating 26
  Maintaining 25
  Maintenance tasks 25
  Preparing 24
  Rating plate 23
  Technical data 23
  Using 24
  Versions 21
Offset gears 21
Old devices 103
Operating 62
Operating conditions 105
Operation 62
Operator 48
Operator's obligations 46
Ordering spare parts 95
Other applicable documents 3

P

Packaging material 8
PDF file 80
Performance values 104
Performance variables 13
Personal protective equipment 49
Personnel 47
Personnel qualifications 47
Pistol grip 16
PLARAD customer service 48
PLARAD service 48
PPE 49
Preparation 52
Protection class II 31

Q

Qualified nutrunner personnel 47
Quick-release lock 16

R

Radio module 32
Rating plate 13
Release function 20

Residual risks 36
Antenna 39
Bracing 40
Breakage 40
Crushing 40
Ejecting 39
Electric shock 37
Electrical energy 37
EMC 39
Hot surfaces 42
Interfering radiation 39
Moving components 39
Noise 42
Overloading 40
Radiation 39
Rotational movements 39
Spare parts 40
Transmitter 39
Weight 40
Roles 78

S

Safety 28
Safety devices 44
Safety swivel joint 20
Safety-Start-trigger 18, 77
Screw direction 77
Screw loosening 77
SERIAL no. 32
Service 4, 48
Service tasks 97
Setting levels 15, 58
Setting the torque levels 58
Settings 83
Signs 30
Sleep mode 67
Sleep Time 77
Software
DA2 67
DSS 84
SST 18
Start screen 69
Stickers 30
Suggestion for improvement 4
Symbols
In this manual 28
On the nutrunner 30
Synchronising the clock 80

T

Technical data 104
Tightening 62
Tool diagnostic 91
Transport position 15
Trigger 17
Two-hand controls 18

U

Unauthorised persons 48
Unpacking 7
User 47
List 78
User manager 78
User Manager 78
User requirements 47
User/Station ID 77
Users
Assigning roles 78
Deleting 79
Exporting access rights 80
Importing access rights 79
New 79

W

Who can I ask? 48
Wifi
Channel 77
Status 77
WiFi 77, 106
Starting hotspot 68
Status 77
Windows® 67

Appendix

The following documents are supplied with the nutrunner in a document folder in addition to this manual.

- EU declaration of conformity
- USB stick
- Torque chart
- Certificates (option)

EC Declaration of Conformity

Translation of original

Manufacturer	Maschinenfabrik Wagner GmbH & Co. KG
	Birrenbachshöhe 17 53804 Much Germany
Authorised representative	Dr Marcus Stuhlert
Product name	$DA2_{power}$ -05 / -10 / -20 / -30 / -36 / -48 / -80 $DA2_{docu}$ -05 / -10 / -20 / -30 / -36 / -48 / -80 $DA2_{safety}$ -05 / -10 / -20 / -30 / -36 / -48 / -80 $DA2_{motion}$ -03 / -05 / -10 / -20
Type	See rating plate
Serial number Year of manufacture	See rating plate

The manufacturer declares that the machine conforms to all applicable requirements of Directive:

2006/42/EC	EC Machinery Directive

The partly completed machine further conforms to all requirements of Directives:

2014/35/EU	Low Voltage Directive
2014/30/EU	EMC Directive
2011/65/EU	RoHS Directive

The following harmonised standards have been applied:

EN ISO 12100:2010	Safety of machinery – General principles for design – Risk assessment and risk reduction
EN 60745-1:2009 + A11:2010	Hand-held motor-operated electric tools. Safety. General Requirements
EN 60745-2-2:2010 in conjunction with EN 60745-1:2009 + A11:2010	Hand-held motor-operated electric tools – Safety – Part 2-12: Particular requirements for concrete vibrators
DIN EN 55014-1:2017	Electromagnetic compatibility – Requirements for household appliances, electric tools and similar apparatus – Part 1
EN 61000-6-2:2019	Electromagnetic compatibility (EMC) – Part 6-2: Generic standards – Immunity standard for industrial environments

Much, 13/03/2023	Dr Marcus Stuhlert (Managing Director)

Maschinenfabrik Wagner GmbH & Co. KG
Birrenbachshöhe 17 · 53804 Much · Germany
Managing Director: Dr Marcus Stuhlert
pA# 83203

Phone international: +49 (0)2245 62 – 10
Fax international: +49 (0)2245 62 – 22

email: info@plarad.com
Internet: www.plarad.com